TRAUMA

plates&screwscatalog

Tst | Orthopedic Implants

CE 1984

TST Medical Devices reserves the right to update,
change or modify contents and products at any
time without any notice or liability.

UP-11 Mini Plates CMF 2.0 mm Set 6

Mini Plate 2.0 mm Ti 7
Instruments 8

UP-01 Upper Extremity Plates Set 10

Clavicle Plates 11
Distal Clavicle Plates 11
Clavicle Hook Plates 12
Scapula Plates* 13
Proximal Humerus Locking Plates 14
LC DCP Humerus Plates 15
Distal Humerus Locking Y Plates 16
Distal Humerus Epicondylar Lateral Plates 17
Distal Humerus Lateral Plates 18
Distal Humerus Medial Plates 19
Olecranon Plates 20
Small Head Olecranon Plates 20
Ulna Radius Diaphysis Plates 21
1\3 Tubular Radius Ulna Plates 22
Coronoid Plates* 23
Small Radial Head Plates* 24
Wrist Fusion Locking Plates* 25
Small Head Distal Ulna Plates* 25
Plates & Screws, Instruments 26

UP-03 Small Head Distal Radius Plates Set 30

Small Head Wide Distal Radius Plates (Volar) 31
Small Distal Radius Y Plates (Dorsal) 32
Small Distal Radius L Plates (Dorsal) 33
Small Distal Radius Straight Plates 33
Small Distal Radius Locking T Plates (Volar) 34
Plates & Screws, Instruments 35

UP-04 Distal Radius Variable Angle Locking (VAL) Plates Set 38

Distal Radius VAL Plates (Narrow) 39
Distal Radius VAL Plates (Wide) 40
Plates & Screws, Instruments 41

UP-16 Mini Plates Hand 1.5, 2.0, 2.3 mm Set 44

Mini Plates 1.5 mm 45
Mini Plates 2.0 mm 47
Mini Plates 2.0 & 2.3 mm 49
Plates & Screws, Instruments 51

UP-13 Intercarpal Fusion Plates Set 54

Intercarpal Fusion Plate 55
Plates & Screws, Instruments 56

LW-25 Pelvic Acetabular Plates Set 58

Pelvic Acetabular Plates 59
Acetabular Plates* 60
Plates & Screws, Instruments 61

LW-01SS / LW-02 Ti Cable Plates Set 66

Cable Plates 67
Plates & Screws, Instruments 68

LW-04 Ti / LW-05 SS DHS/DCS Plates Set 72

DHS (Dynamic Hip Screw) Plates 73
DCS (Dynamic Condylar Screw) Plates 74
Trochanter Major Stabilization Plates* 75
Plates & Screws, Instruments 76

LW-36 Lower Extremity Plates Set 80

Proximal Femur Plates 81
Femur Plates 82
Tibia Plates 83
Distal Femur Medial Osteotomy Plates* 84
Plates & Screws, Instruments 85

LW-30 MISS Distal Femur Plates Set 90

MISS Distal Femur Plates 91
Plates & Screws, Instruments 92

LW-28 OWO Plates Set 96

Intercarpal Fusion Plate 97
Plates & Screws, Instruments 98

LW-12 MISS Proximal Tibia Plates Set 100

MISS Proximal Tibia Lateral Plates 101
MISS Proximal Tibia Medial Plates 102
Plates & Screws, Instruments 103

LW-22 Ankle Plates Set 108

MISS LC Distal Tibia Medial Plates 109
Distal Tibia Anterior Lateral Plates 110
Distal Tibia Posterior Plates 111
Pilon Plates 112
Distal Fibula Plates 113
Anatomic Distal Fibula Locking Plate 114
Calcaneus Plates 115
Proximal Tibia Posteriomedial Plates* 116
Plates & Screws, Instruments 117

UP-12 LC Mini Fragment Plates Set 122

LC Mini Fragment Plates (2.0- 2.4- 2.7 mm) 123
Plates & Screws, Instruments 124

LW-27 Tension Band Implants Set 128

Tension Band 129
Plates & Screws, Instruments 130

CS-02 HCCS Micro, Mini, Standard Set 131
HCCS Micro, Mini, Standard Screws 132
Instruments 132

CS-01 HCCS Plus Set 133
HCCS Plus Screws 134
Instruments 134

CS-03 Herbert Screws Set 136
Herbert Screws 137
Instruments 138

CS-04 4.0 mm Cannulated Screws Set 139
4.0 mm Cannulated Screws 140
Instruments 140

CS-06 6.5 mm Cannulated Screws Set 141
4.0 mm Cannulated Screws 142
Instruments 142

CS-08 4.0 mm Cannulated Locking Screws Set 143
4.0 mm Cannulated Locking Screws 144
Instruments 144

CS-09 5.0-5.5 mm Cannulated Locking Screws Set 145
5.0-5.5 mm Cannulated Locking Screws 145
Instruments 145

CS-10 6.5 mm Cannulated Locking Screws Set 146
6.5 mm Cannulated Locking Screws 146
Instruments 146

UP-11
MINI PLATES CMF 2.0 MM SET

UP-11 Mini Plates CMF 2.0 mm Set

MINI PLATES 2.0 MM Ti

Indications: Fracture fixation of hand, foot and jaw bone, osteoporotic bones or multi-part fractures, and fractures involving the joint, malunion, non-union and osteotomy in adult patients.

Craniomaxillofacial (CMF) applications; various implants are inevitable in order to support the healing of bone defects of osseous congenital deformities and deformities caused by trauma.

TST Code	Barcode	Description	Qty
36020010002	8698673415829	JAWBONE PLATE STRAIGHT LONG 2 HOLES	3
36020010004	8698673415836	JAWBONE PLATE STRAIGHT LONG 4 HOLES	3
36020010006	8698673415843	JAWBONE PLATE STRAIGHT LONG 6 HOLES	3
36120000004	8698673415935	JAWBONE STRAIGHT PLATE REG. 4 HOLES	3
36120000006	8698673415911	JAWBONE STRAIGHT PLATE REG. 6 HOLES	3
36120000008	8698673415928	JAWBONE STRAIGHT PLATE REG. 8 HOLES	3
36220010004	8698673415904	JAWBONE T PLATE LONG 4 HOLES	3
36220010005	8698673415850	JAWBONE T PLATE LONG 5 HOLES	3
36220000005	8698673415942	JAWBONE T PLATE REGULAR 5 HOLES	3
36320010006	8698673439191	JAWBONE DOUBLE T PLATE 6 HOLES	3
35820010004	8698673415775	JAWBONE Y PLATE LONG 4 HOLES	3
35820010005	8698673415782	JAWBONE Y PLATE LONG 5 HOLES	3
35820000004	8698673415751	JAWBONE Y PLATE REGULAR 4HOLES	3
35820000005	8698673415768	JAWBONE Y PLATE REGULAR 5 HOLES	3
37120010006	8698673438941	JAWBONE DOUBLE Y PLATE 6 HOLES	3
35920000007	8698673415799	JAWBONE ORBITAL PLATE 7 HOLES	3
35920000009	8698673415805	JAWBONE ORBITAL PLATE 9 HOLES	3
35920000011	8698673415812	JAWBONE ORBITAL PLATE 11 HOLES	3
35725010004	8698673415713	JAWBONE L PLATE R LONG 4 HOLES	3
35725010005	8698673415737	JAWBONE L PLATE R LONG 5 HOLES	3
35726010004	8698673415720	JAWBONE L PLATE L LONG 4 HOLES	3
35726010005	8698673415744	JAWBONE L PLATE L LONG 5 HOLES	3
35725000004	8698673415867	JAWBONE L PLATE R REGULAR 4 HOLES	3
35725000005	8698673415881	JAWBONE L PLATE R REGULAR 5 HOLES	3
35726000004	8698673415874	JAWBONE L PLATE L REGULAR 4 HOLES	3
35726000005	8698673415898	JAWBONE L PLATE L REGULAR 5 HOLES	3
36525010004	8698673438958	JAWBONE Z PLATE REGULAR RIGHT 4 HOLES	3
36525020004	8698673438965	JAWBONE Z PLATE LONG RIGHT 4 HOLES	3
36526020004	8698673440241	JAWBONE Z PLATE LONG LEFT 4 HOLES	3
36526010004	8698673440258	JAWBONE Z PLATE REGULAR LEFT 4 HOLES	3

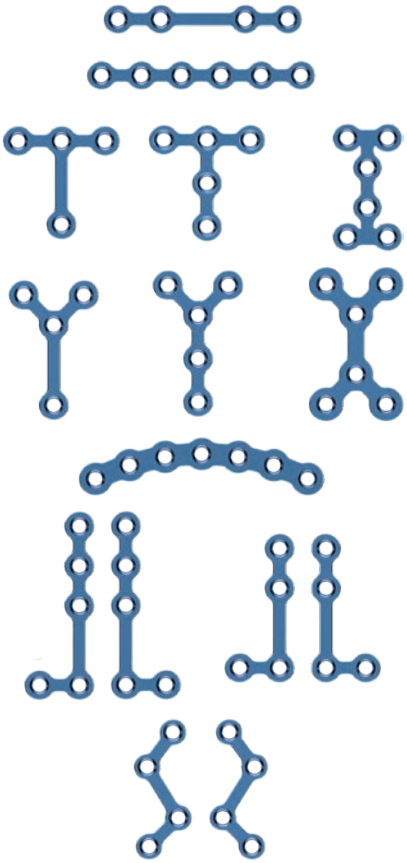

Types of the Screws; Non-locking screws of 2.0 mm diameter. The head structure of the screw is in the form of low profile, and compatible with a hexagonal tip screwdriver.

CORTICAL SCREW Ti Ø 2.0 MM

TST Code	Barcode	Length	Qty
20120050020	8698673413269	5 MM	14
20120070020	8698673413276	7 MM	14
20120090020	8698673413283	9 MM	14
20120110020	8698673413306	11 MM	14
20120130020	8698673413290	13 MM	14
20120150020	8698673438897	15 MM	14
20120170020	8698673438903	17 MM	14

Instruments

No	TST Code	Barcode	Description	Qty
1	00280136027	8699931029307	DESIGN TRAY 280X136X27 MM	1
2	00270065020	8680858431335	MINI PLATES IMPLANT DESIGN TRAY	1
3	02900017080	8699931026702	SCREW DRIVER HEX.QUICK TIP HOLDER Ø1.7X80 MM	1
4	02000480017	8699931029253	SCREW DRIVER QUICK HEX. TIP Ø 1.7X80 MM	1
5	02015100015	8699931021547	UNIVERSAL SCREW DRIVER HANDLE	1
6	01610010000	8680858424610	GRADUATED DRILL SLEEVE-MINI PLATE	1
7	04551006110	8699931029284	K-WIRE TUBE Ø10XØ6X110 MM	1
7	23410080115	8699931013429	KIRSCHNER WIRE TROCAR POINT 1.5X80 MM	4
7	00211015064	8699931023121	QUICK DRILL Ø 1.5X64 MM	1
8	03020000115	8698673493353	PENSET SMALL	1
9	03610020045	8680858425754	TROCAR 2 X 45 MM	1
10	01260009015	8680858424795	DRILL BIT 1.5X90 MM	2
11	03040200125	8698673493261	PLATE BENDER 125 MM	1
	00290145060	8680858424733	CONTAINER 290X145X60 MM	1

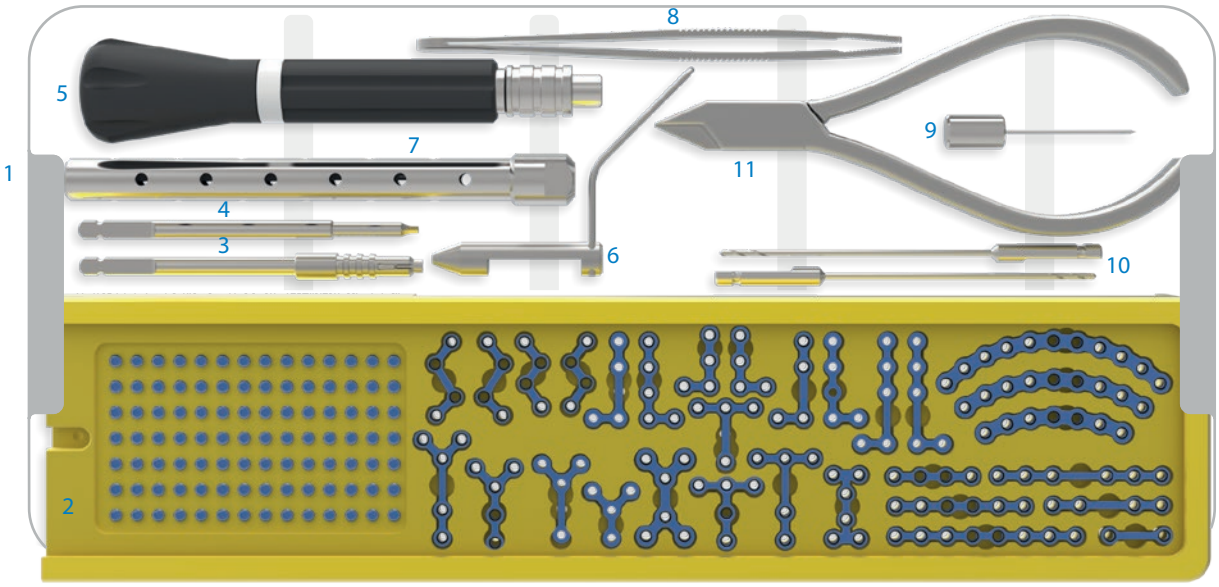

UP-01
UPPER EXTREMITY PLATES SET

CLAVICLE PLATES

Indications: All fractures of the clavicle in metaphyseal and diaphyseal areas and corrective osteotomy of the clavicle.

Plate Profile: Thickness: 3.0 mm, Width: 10.0 mm.

TST Code	Barcode	Description	Side	Material	Length (mm)
36625700004	8698673425859	LOW PROF. LOCK. CLAVICLE PLATE 4 HOLES	R	Ti	54
36625700006	8698673425866	LOW PROF. LOCK. CLAVICLE PLATE 6 HOLES	R	Ti	78
36625700008	8698673425873	LOW PROF. LOCK. CLAVICLE PLATE 8 HOLES	R	Ti	98
36625700012	8698673444669	LOW PROF. LOCK. CLAVICLE PLATE 10 HOLES	R	Ti	115*
36626700004	8698673425880	LOW PROF. LOCK. CLAVICLE PLATE 4 HOLES	L	Ti	54
36626700006	8698673425897	LOW PROF. LOCK. CLAVICLE PLATE 6 HOLES	L	Ti	78
36626700008	8698673425903	LOW PROF. LOCK. CLAVICLE PLATE 8 HOLES	L	Ti	98
36626700012	8698673444690	LOW PROF. LOCK. CLAVICLE PLATE 10 HOLES	L	Ti	115*

*optional

8 holes

Recommended Screws 3.5 mm Cortical, 3.5 mm Lock. Cortical, 4.0 mm Cancellous, 4.0 mm Lock. Cancellous

DISTAL CLAVICLE PLATES

Indications: Fracture fixation and stability for lateral third clavicle fractures, malunions, and nonunions. Multiple 2.7 mm distal screw configurations are designed to secure stability.

Plate Profile: Thickness 2.5 mm, Width: 8 mm, Distance between holes 12 mm.

TST Code	Barcode	Description	Side	Material	Length (mm)
36625700009	8698673483309	DISTAL CLAVICLE PLATES R TI 9 HOLES	R	Ti	66
36625700010	8698673444652	DISTAL CLAVICLE PLATES R TI 10 HOLES	R	Ti	77
36625700011	8698673483392	DISTAL CLAVICLE PLATES R TI 11 HOLES	R	Ti	94
36626700009	8698673483316	DISTAL CLAVICLE PLATES L TI 9 HOLES	L	Ti	66
36626700010	8698673444683	DISTAL CLAVICLE PLATES L TI 10 HOLES	L	Ti	77
36626700011	8698673483408	DISTAL CLAVICLE PLATES L TI 11 HOLES	L	Ti	94

11 holes

Recommended Screws 2.7 mm Small Head, 2.7 mm Small Head Lock., 3.5 mm Cortical, 3.5 mm Lock. Cortical, 4.0 mm Cancellous, 4.0 mm Lock. Cancellous

CLAVICLE HOOK PLATES

Indications: Lateral clavicle fractures and dislocation of the acromioclavicular joint.

Plate Profile: Thickness: 2.5 mm, Width: 10.0 mm, Distance between holes: 8.5 mm.

TST Code	Barcode	Description	Side	Material	Length (mm)
36625710004	8698673476332	LOCKING CLAVICLE HOOK PLATE 4 HOLES	R	Ti	75
36625710006	8698673476349	LOCKING CLAVICLE HOOK PLATE 6 HOLES	R	Ti	106
36625710008	8698673476356	LOCKING CLAVICLE HOOK PLATE 8 HOLES	R	Ti	130
36626710004	8698673476301	LOCKING CLAVICLE HOOK PLATE 4 HOLES	L	Ti	75
36626710006	8698673476318	LOCKING CLAVICLE HOOK PLATE 6 HOLES	L	Ti	106
36626710008	8698673476325	LOCKING CLAVICLE HOOK PLATE 8 HOLES	L	Ti	130

4 holes

Recommended Screws 3.5 mm Cortical, 3.5 mm Lock. Cortical, 4.0 mm Cancellous, 4.0 mm Lock. Cancellous

UP-01 Upper Extremity Plates Set

SCAPULA PLATES*

Indications: Scapula body fractures, glenoid neck fractures, intra-articular glenoid fractures, scapula spine fractures and acromial fractures.

Plate Profile: Thickness: 3.0 mm, *Glenoid: 2.5 mm, Width: 10.0 mm.

TST Code	Barcode	Description	Side	Material	Length (mm)
36526000101	8699931022155	SCAPULA LATERAL LOCKING LONG PLATE	L	Ti	100
36525000101	8699931022162	SCAPULA LATERAL LOCKING LONG PLATE	R	Ti	100
36526000201	8699931025149	SCAPULA LATERAL LOCKING SHORT PLATE	L	Ti	71
36525000201	8699931025132	SCAPULA LATERAL LOCKING SHORT PLATE	R	Ti	71
36526010200	8699931022216	SCAPULA MEDIAL LOCKING PLATE LONG	L	Ti	96 / 100
36525010200	8699931022223	SCAPULA MEDIAL LOCKING PLATE LONG	R	Ti	96 / 100
36526020200	8699931022230	SCAPULA MEDIAL LOCKING PLATE STANDARD	L	Ti	73 / 100
36525020200	8699931022247	SCAPULA MEDIAL LOCKING PLATE STANDARD	R	Ti	73 / 100
36526010020	8699931022292	SCAPULA SPINE LOCKING PLATE LONG	L	Ti	76
36525010020	8699931022308	SCAPULA SPINE LOCKING PLATE LONG	R	Ti	76
36526020020	8699931022315	SCAPULA SPINE LOCKING PLATE STANDARD	L	Ti	72
36525020020	8699931022322	SCAPULA SPINE LOCKING PLATE STANDARD	R	Ti	72
36526000010	8699931022117	GLENOID LOCKING PLATE	L	Ti	27
36525000010	8699931022124	GLENOID LOCKING PLATE	R	Ti	27

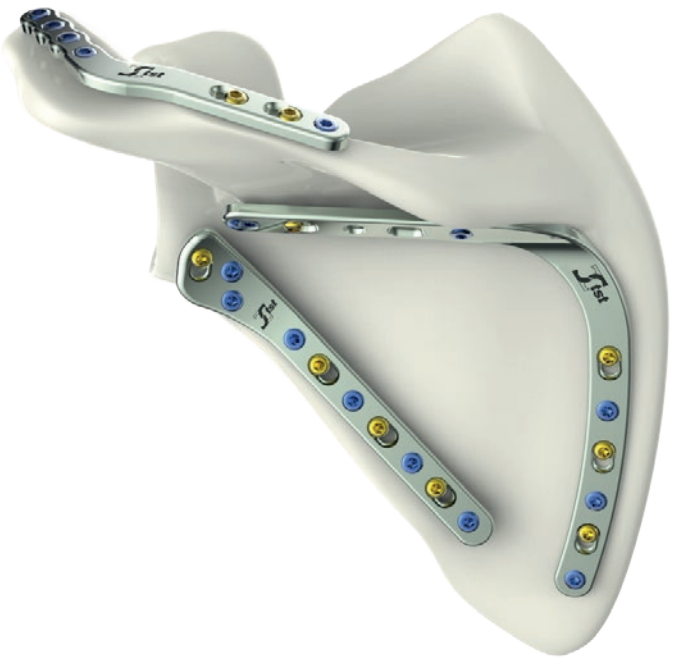

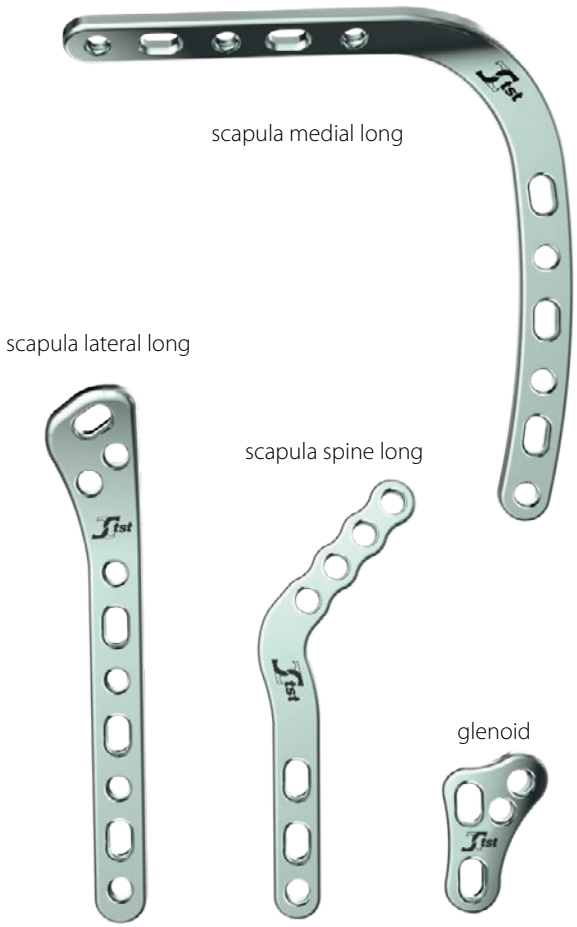

Recommended Screws 3.5 mm Cortical, 3.5 mm Lock. Cortical, 4.0 mm Cancellous, 4.0 mm Lock. Cancellous

PROXIMAL HUMERUS LOCKING PLATES

Indications: Proximal Humerus Locking Plate is indicated for fractures and fracture-dislocations, osteotomies and nonunions of the proximal humerus and especially for patients with osteopenic bone.

Plate Profile: Thickness: 3.9 mm, Width: 12.0 mm, Distance between holes: 15.0 mm.

TST Code	Barcode	Description	Material	Length (mm)
34620710012	8698673441415	MISS PROXIMAL HUMERUS LOCKING PLATE 12 HOLES	Ti	94
34620710014	8698673441422	MISS PROXIMAL HUMERUS LOCKING PLATE 14 HOLES	Ti	124
34620710016	8698673441439	MISS PROXIMAL HUMERUS LOCKING PLATE 16 HOLES	Ti	150
34620710017	8698673441446	MISS PROXIMAL HUMERUS LOCKING PLATE 17 HOLES	Ti	162
34620710019	8698673469693	MISS PROXIMAL HUMERUS LOCKING PLATE 19 HOLES	Ti	190
34620710021	8698673441453	MISS PROXIMAL HUMERUS LOCKING PLATE 21 HOLES	Ti	218

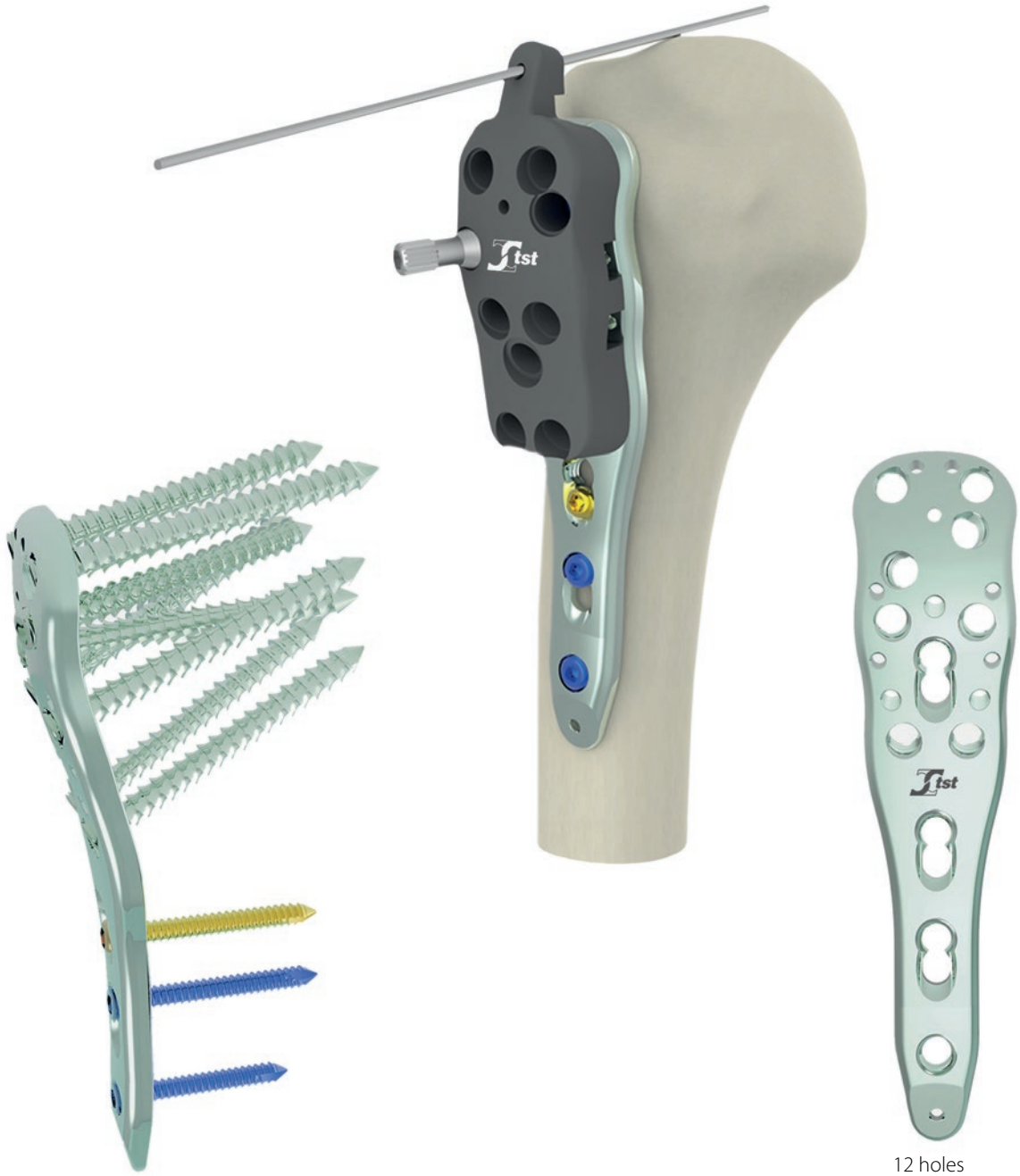

12 holes

Recommended Screws 3.5 mm Cortical, 3.5 mm Lock. Cortical, 4.0 mm Cancellous, 4.0 mm Lock. Cancellous

LC DCP HUMERUS PLATES

Indications: Osteosynthesis of humerus allowing buttressing, neutralization, tension banding, bridging and compression.

Plate Profile: Thickness: 4 mm, Width: 14.0 mm, Distance between holes: 17.5 mm.

TST Code	Barcode	Description	Material	Length (mm)
31727000004	8698673422889	LC DCP LOCK HUM PLATE 4 HOLES	Ti	80
31727000005	8698673422896	LC DCP LOCK HUM PLATE 5 HOLES	Ti	98
31727000006	8698673422902	LC DCP LOCK HUM PLATE 6 HOLES	Ti	115
31727000007	8698673422919	LC DCP LOCK HUM PLATE 7 HOLES	Ti	133
31727000008	8698673422926	LC DCP LOCK HUM PLATE 8 HOLES	Ti	150
31727000009	8698673422933	LC DCP LOCK HUM PLATE 9 HOLES	Ti	168
31727000010	8698673422940	LC DCP LOCK HUM PLATE 10 HOLES	Ti	185
31727000012	8698673422964	LC DCP LOCK HUM PLATE 12 HOLES	Ti	220

8 holes

Recommended Screws 3.5 mm Cortical, 3.5 mm Lock. Cortical, 4.0 mm Cancellous, 4.0 mm Lock. Cancellous

DISTAL HUMERUS LOCKING Y PLATES

Indications: Intraarticular fractures of the distal humerus, supracondylar fractures and nonunions of the distal humerus.

Plate Profile: Thickness 3.0 mm, Width: 12.0 mm, Distance between holes: 14.0 mm.

TST Code	Barcode	Description	Side	Material	Length (mm)
32325700011	8698673448735	DISTAL HUMERUS LOCKING Y PLATE 11 HOLES	R	Ti	103
32325700013	8698673448742	DISTAL HUMERUS LOCKING Y PLATE 13 HOLES	R	Ti	131
32325700015	8698673485082	DISTAL HUMERUS LOCKING Y PLATE 15 HOLES	R	Ti	159
32326700011	8698673448766	DISTAL HUMERUS LOCKING Y PLATE 11 HOLES	L	Ti	103
32326700013	8698673448773	DISTAL HUMERUS LOCKING Y PLATE 13 HOLES	L	Ti	131
32326700015	8698673485075	DISTAL HUMERUS LOCKING Y PLATE 15 HOLES	L	Ti	159

15 holes

Recommended Screws 3.5 mm Cortical, 3.5 mm Lock. Cortical, 4.0 mm Cancellous, 4.0 mm Lock. Cancellous

DISTAL HUMERUS EPICONDYLAR LATERAL PLATES

Indications: Intraarticular fractures of the distal humerus, supracondylar fractures and nonunions of the distal humerus.

Plate Profile: Thickness: 3.0 mm, Width: 12.0 mm, Distance between holes: 14.0 mm.

TST Code	Barcode	Description	Side	Material	Length (mm)
31825700008	8698673448568	LDC DISTAL HUM. EPICOND.LAT PLATE 8 HOLES	R	Ti	103
31825700010	8698673448575	LDC DISTAL HUM. EPICOND.LAT PLATE 10 HOLES	R	Ti	131
31825700012	8698673448582	LDC DISTAL HUM. EPICOND.LAT PLATE 12 HOLES	R	Ti	159
31826700008	8698673448612	LDC DISTAL HUM. EPICOND.LAT PLATE 8 HOLES	L	Ti	103
31826700010	8698673448629	LDC DISTAL HUM. EPICOND.LAT PLATE 10 HOLES	L	Ti	131
31826700012	8698673448636	LDC DISTAL HUM. EPICOND.LAT PLATE 12 HOLES	L	Ti	159

12 holes

Recommended Screws 3.5 mm Cortical, 3.5 mm Lock. Cortical, 4.0 mm Cancellous, 4.0 mm Lock. Cancellous

DISTAL HUMERUS LATERAL PLATES

Indications: Intraarticular fractures of the distal humerus, supracondylar fractures and nonunions of the distal humerus.

Plate Profile: Thickness: 3.0 mm, Width: 10.0 mm, Distance between holes: 12.0 mm.

TST Code	Barcode	Description	Side	Material	Length (mm)
35325701008	8698673418127	LOW PRO.DIST.ELBOW INT.LATERAL ANAT.PLATE 8 H	R	Ti	80
35325701009	8698673418134	LOW PRO.DIST.ELBOW INT.LATERAL ANAT.PLATE 9 H	R	Ti	92
35325701010	8698673418141	LOW PRO.DIST.ELBOW INT.LATERAL ANAT.PLATE 10 H	R	Ti	105
35326701008	8698673418080	LOW PRO.DIST.ELBOW INT.LATERAL ANAT.PLATE 8 H	L	Ti	80
35326701009	8698673418097	LOW PRO.DIST.ELBOW INT.LATERAL ANAT.PLATE 9 H	L	Ti	92
35326701010	8698673418103	LOW PRO.DIST.ELBOW INT.LATERAL ANAT.PLATE 10 H	L	Ti	105

10 holes

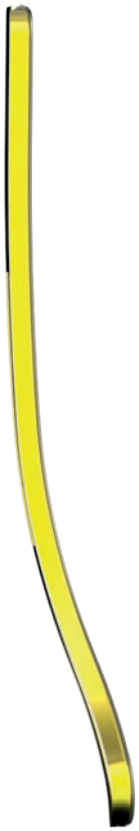

Recommended Screws 3.5 mm Cortical, 3.5 mm Lock. Cortical, 4.0 mm Cancellous, 4.0 mm Lock. Cancellous

DISTAL HUMERUS MEDIAL PLATES

Indications: Intraarticular fractures of the distal humerus, supracondylar fractures and nonunions of the distal humerus.

Plate Profile: Thickness: 3.0 mm, Width: 10.0 mm, Distance between holes: 9.0 mm.

TST Code	Barcode	Description	Material	Length (mm)
35227002008	8698673418165	LOWPRO.DIST.ELBOW INT.MEDIAL ANAT.PLATE 8 H	Ti	92
35227002010	8698673418172	LOWPRO.DIST.ELBOW INT.MEDIAL ANAT.PLATE 10 H	Ti	117
35227002012	8698673423114	LOWPRO.DIST.ELBOW INT.MEDIAL ANAT.PLATE 12 H	Ti	141

8 holes

Recommended Screws 3.5 mm Cortical, 3.5 mm Lock. Cortical, 4.0 mm Cancellous, 4.0 mm Lock. Cancellous

OLECRANON PLATES

Indications: Complex extra- and intra-articular olecranon fractures, pseudoarthroses of the proximal ulna, osteotomies and simple olecranon fractures.

Plate Profile: Thickness: 4.0 mm, Width: 12.0 mm, Distance between holes: 14.0 mm for 8 holes, 13.0 mm for 10 holes, 15.0 mm for 12 holes.

TST Code	Barcode	Description	Side	Material	Length (mm)
34727000008	8698673418820	LOWPROFILE I.L. OLECRANON PLATE 8 HOLES	-	Ti	91
34727000010	8698673418837	LOWPROFILE I.L. OLECRANON PLATE 10 HOLES	-	Ti	111
34727500012	8698673423282	LOWPROFILE I.L. OLECRANON PLATE 12 HOLES	R	Ti	151
34727600012	8698673423251	LOWPROFILE I.L. OLECRANON PLATE 12 HOLES	L	Ti	151

Recommended Screws 3.5 mm Cortical, 3.5 mm Lock. Cortical, 4.0 mm Cancellous, 4.0 mm Lock. Cancellous

SMALL HEAD OLECRANON PLATES

Indications: Complex extra and intra-articular olecranon fractures, pseudoarthroses of the proximal ulna, osteotomies and simple olecranon fractures.

Plate Profile: Thickness: 3.0 mm, Width: 10.0 mm, Distance between holes: 15.0 mm.

TST Code	Barcode	Description	Side	Material	Length (mm)
34220000008	8699931033885	PROXIMAL ULNA PLATE R 8 HOLES	R	Ti	80
34220000010	8699931033892	PROXIMAL ULNA PLATE R 10 HOLES	R	Ti	110
34225000012	8699931033908	PROXIMAL ULNA PLATE R 12 HOLES	R	Ti	140
38320700000	8680858408054	PROXIMAL ULNA PLATE L 8 HOLES	L	Ti	80
34727500013	8698673427518	PROXIMAL ULNA PLATE L 10 HOLES	L	Ti	110
34226000012	8699931033915	PROXIMAL ULNA PLATE L 12 HOLES	L	Ti	140

Recommended Screws 2.7 mm Small Head, 2.7 mm Small Head Lock., 3.5 mm Cortical, 3.5 mm Lock. Cortical, 4.0 mm Cancellous, 4.0 mm Lock. Cancellous

ULNA RADIUS DIAPHYSIS PLATES

Indications: The plates are indicated for the treatment of midshaft fractures of the radius and ulna. Therefore this plate can be used to treat many forearm fractures including simple to complex both-bone fractures, transverse fractures, comminuted fractures, open fractures and displaced, isolated fractures of the radius or ulna exhibiting a rotational deformity.

Plate Profile: Thickness: 4.0 mm, Width: 10.0 mm, Distance between holes: 12.0 mm.

TST Code	Barcode	Description	Material	Length (mm)
34827100004	8698673422971	LOW PROFILE ULNA RADIUS INTERLOCK.PLATE 4 HOLES	Ti	62
34827100005	8698673422988	LOW PROFILE ULNA RADIUS INTERLOCK.PLATE 5 HOLES	Ti	74
34827100006	8698673422995	LOW PROFILE ULNA RADIUS INTERLOCK.PLATE 6 HOLES	Ti	86
34827100007	8698673423008	LOW PROFILE ULNA RADIUS INTERLOCK.PLATE 7 HOLES	Ti	98
34827100008	8698673423015	LOW PROFILE ULNA RADIUS INTERLOCK.PLATE 8 HOLES	Ti	110
34827100009	8698673423039	LOW PROFILE ULNA RADIUS INTERLOCK.PLATE 9 HOLES	Ti	122
34827100010	8698673423022	LOW PROFILE ULNA RADIUS INTERLOCK.PLATE 10 HOLES	Ti	134
34827100012	8698673423121	LOW PROFILE ULNA RADIUS INTERLOCK.PLATE 12 HOLES	Ti	158

8 holes

Recommended Screws 3.5 mm Cortical, 3.5 mm Lock. Cortical, 4.0 mm Cancellous, 4.0 mm Lock. Cancellous

1/3 TUBULAR RADIUS ULNA PLATES

Indications: 1/3 Tubular Plate is used as a buttress plate for fibula, ulna-radius, metatarsals, and metacarpals bones.

Plate Profile: Thickness: 1.5 mm, Width: 9.0 mm, Distance between holes: 12.0 mm.

TST Code	Barcode	Description	Material	Length (mm)
34827000004	8698673418875	LOWPR 1\3 RADIUS ULNA I.L.PLATE 4 HOLES	Ti	49
34827000005	8698673418882	LOWPR 1\3 RADIUS ULNA I.L.PLATE 5 HOLES	Ti	61
34827000006	8698673418899	LOWPR 1\3 RADIUS ULNA I.L.PLATE 6 HOLES	Ti	73
34827000007	8698673418905	LOWPR 1\3 RADIUS ULNA I.L.PLATE 7 HOLES	Ti	85
34827000008	8698673418912	LOWPR 1\3 RADIUS ULNA I.L.PLATE 8 HOLES	Ti	97
34827000009	8698673423510	LOWPR 1\3 RADIUS ULNA I.L.PLATE 9 HOLES	Ti	109
34827000010	8698673418929	LOWPR 1\3 RADIUS ULNA I.L.PLATE 10 HOLES	Ti	121
34827000012	8698673422872	LOWPR 1\3 RADIUS ULNA I.L.PLATE 12 HOLES	Ti	145

10 holes

Recommended Screws 3.5 mm Cortical, 3.5 mm Lock. Cortical, 4.0 mm Cancellous, 4.0 mm Lock. Cancellous

UP-01 Upper Extremity Plates Set

CORONOID PLATES*

Indications: Coronoid fractures and the fixation of the small segments.

It is not easy to diagnose Coronoid fractures and the fixation of the small segments. It's known that conventional screw-suture fixation is insufficient against the anterior sided, strong dislocation forces of the distal humerus. Coronoid plate provides a strong advantage for the fixation of these types of hard cases. Coronoid plate has been developed for the purpose to buttress. Tightly gripping the coronoid fragments with prongs is one of the significant feature of the plate.

Plate Profile: Thickness: 2.0 mm, Width: 9.0 mm, Distance between holes: 12.0 mm.

TST Code	Barcode	Description	Side	Material	Length (mm)
36826700000	8698673426368	LOW PROFILE CORONOID PLATE	R	Ti	35
36825700000	8698673426351	LOW PROFILE CORONOID PLATE	L	Ti	35

Recommended Screws 3.5 mm Cortical, 4.0 mm Cancellous

UP-01 Upper Extremity Plates Set

SMALL RADIAL HEAD PLATES*

Indications: The plate is indicated for extra-articular and intra-articular fractures of the proximal radius and multi-fragmented radial neck fractures.

Plate Profile: Thickness: 1.5 mm, Width: 7.0 mm, Distance between holes: 5.0 mm.

TST Code	Barcode	Description	Material	Length (mm)
36920800007	8699931028843	LC SMALL FRAGMENT RADIAL HEAD PLATE 7 HOLES	Ti	33
36920800008	8699931028850	LC SMALL FRAGMENT RADIAL HEAD PLATE 8 HOLES	Ti	38
36920800009	8699931028867	LC SMALL FRAGMENT RADIAL HEAD PLATE 9 HOLES	Ti	43

8 holes

Recommended Screws 2.7 mm Small Head, 2.7 mm Small Head Lock.

UP-01 Upper Extremity Plates Set

WRIST FUSION LOCKING PLATES*

Indications: This system is indicated for wrist arthrodesis and also for specific indications including posttraumatic arthritis of the joints of the wrist, rheumatoid wrist deformities requiring restoration, complex carpal instability, sequelae of septic arthritis of the wrist, severe unremitting wrist pain related to motion, brachial plexus nerve palsies, tumor resection and spastic deformities.

Plate Profile: Thickness: 2.5 mm, Width: 8.0 mm, Distance between holes: 12.0 mm.

TST Code	Barcode	Description	Material	Length (mm)
30320710001	8699931010152	WRIST FUSION LOCKING PLATE BEND STANDARD	Ti	142
30320710002	8699931010169	WRIST FUSION LOCKING PLATE BEND SHORT	Ti	130
30320700003	8699931010176	WRIST FUSION LOCKING PLATE STRAIGHT	Ti	112

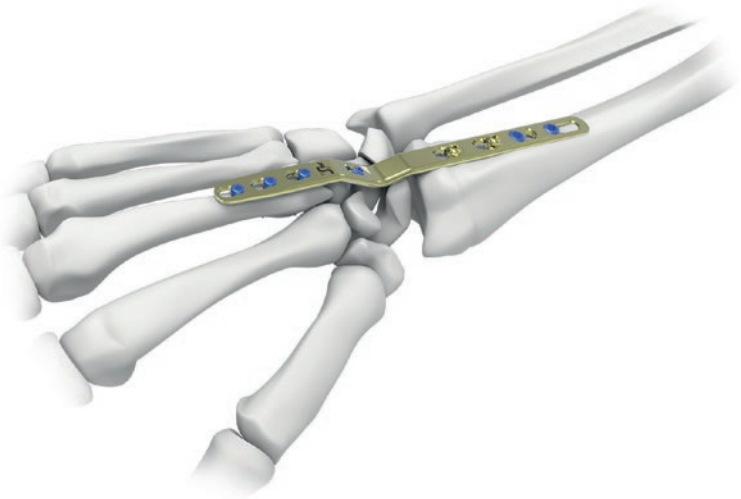

SMALL HEAD DISTAL ULNA PLATES*

Indications: Fractures of the distal ulna which result in instability of the distal radioulnar joint and fractures of the ulna head where the articular surface is either displaced, rotated or tilted. Comminuted extra-articular fractures of the ulnar neck threatening stable congruency of the distal radioulnar joint.

Plate Profile: Thickness: 1.5 mm, Width: 6.0 mm.

TST Code	Barcode	Description	Material	Length (mm)
34828100005	8699931029635	SMALL HEAD DISTAL ULNA LOCK PLATE 5 HOLES	Ti	36
34828100006	8699931029642	SMALL HEAD DISTAL ULNA LOCK PLATE 6 HOLES	Ti	46
34828100007	8699931029659	SMALL HEAD DISTAL ULNA LOCK PLATE 7 HOLES	Ti	51

7 holes

Recommended Screws 2.7 mm Small Head, 2.7 mm Small Head Lock., 3.5 mm Cortical, 3.5 mm Lock. Cortical

Screws

SMALL HEAD SCREW Ti Ø 2.7 MM

TST Code	Barcode	Length	Qty
24620120027	8699931006841	12	1
24620140027	8699931006834	14	1
24620160027	8699931006827	16	1
24620180027	8699931006810	18	1
24620200027	8699931006803	20	1
24620220027	8699931006797	22	1
24620240027	8699931006162	24	1
24620260027	8699931006155	26	1
24620280027	8699931006148	28	1
24620300027	8699931006131	30	1
24620320027	8699931006124	32	1
24620340027	8699931006117	34	1
24620360027	8699931006100	36	1
24620380027	8699931006094	38	1
24620400027	8699931006087	40	1

SMALL HEAD LOCK.SCREW Ti Ø 2.7 MM

TST Code	Barcode	Length	Qty
24627120027	8699931007220	12	3
24627140027	8699931007213	14	3
24627160027	8699931007206	16	3
24627180027	8699931007190	18	3
24627200027	8699931007183	20	3
24627220027	8699931007176	22	3
24627240027	8699931005912	24	3
24627260027	8699931005929	26	3
24627280027	8699931005936	28	3
24627300027	8699931005943	30	3
24627320027	8699931005950	32	3
24627340027	8699931005967	34	3
24627360027	8699931005974	36	3
24627380027	8699931005981	38	3
24627400027	8699931005998	40	3

LOW PROF. CORT. SELFT SCREW Ti Ø 3.5 MM

TST Code	Barcode	Length	Qty
20120120035	8698673417076	12	3
20120140035	8698673417083	14	3
20120160035	8698673417090	16	6
20120180035	8698673417106	18	6
20120200035	8698673417113	20	6
20120220035	8698673417120	22	3
20120240035	8698673417137	24	3
20120260035	8698673417144	26	3
20120280035	8698673417151	28	3
20120300035	8698673417168	30	3
20120320035	8698673417175	32	3
20120340035	8698673417182	34	3
20120360035	8698673417199	36	3
20120380035	8698673417205	38	3
20120400035	8698673417212	40	3
20120420035	8698673417229	42	3
20120440035	8698673417236	44	3
20120460035	8698673417243	46	3
20120480035	8698673417250	48	3
20120500035	8698673417267	50	3
20120550035	8698673477216	55	3
20120600035	8698673426238	60	3

LOW PROF. CORT. LOCK. SCREW SELFT Ti Ø 3.5 MM

TST Code	Barcode	Length	Qty
20127120035	8698673417571	12	5
20127140035	8698673417588	14	5
20127160035	8698673417595	16	10
20127180035	8698673417601	18	10
20127200035	8698673417618	20	10
20127220035	8698673417625	22	5
20127240035	8698673417632	24	5
20127260035	8698673417649	26	5
20127280035	8698673417656	28	5
20127300035	8698673417663	30	5
20127320035	8698673417670	32	5
20127340035	8698673417687	34	5
20127360035	8698673417694	36	5
20127380035	8698673417700	38	5
20127400035	8698673417717	40	5
20127420035	8698673417724	42	5
20127440035	8698673417731	44	5
20127460035	8698673417748	46	5
20127480035	8698673417755	48	5
20127500035	8698673417762	50	5
20127550035	8698673445895	55	5
20127600035	8698673439306	60	5

LOWPROF. CANCELLOUS SCREW (FULL THREAD) Ti Ø 4 MM

TST Code	Barcode	Length	Qty
20420160040	8698673422599	16	2
20420180040	8698673422605	18	2
20420200040	8698673422612	20	2
20420220040	8698673422629	22	2
20420240040	8698673422636	24	2
20420260040	8698673426993	26	2
20420280040	8698673422650	28	2
20420300040	8698673422667	30	2
20420350040	8698673422674	35	4
20420400040	8698673422681	40	4
20420450040	8698673422698	45	4
20420500040	8698673422704	50	4
20420550040	8698673434394	55	4
20420600040	8698673444140	60	4

LOW PROF. CANCEL. LOCK. SCREW SELFT Ti Ø 4 MM

TST Code	Barcode	Length	Qty
20427140040	8698673416826	14	4
20427160040	8698673416833	16	4
20427180040	8698673416840	18	4
20427200040	8698673416857	20	4
20427220040	8698673416864	22	4
20427240040	8698673416871	24	4
20427260040	8698673416888	26	4
20427280040	8698673416895	28	4
20427300040	8698673416901	30	4
20427350040	8698673416918	35	8
20427400040	8698673416925	40	8
20427450040	8698673416932	45	8
20427500040	8698673416949	50	8
20427550040	8698673476639	55	8
20427600040	8698673476646	60	4

MALLEOLAR SCREW Ti Ø 4 MM

TST Code	Barcode	Length	Qty
20320735040	8698673429925	35	2
20320740040	8698673429932	40	2
20320745040	8698673429949	45	2
20320750040	8698673429956	50	2
20320755040	8698673429963	55	2
20320760040	8698673429970	60	2
20320765040	8698673429987	65	2
20320770040	8698673429994	70	2

SCREW WASHER Ti Ø 10 MM

TST Code	Barcode	Diameter	Qty
20820000010	8698673434875	10	5

Plates & Instruments

No	TST Code	Barcode	Description	Qty
	00000301100	8699931023633	UPPER EXTREMITY 1. DESIGN TRAY	1
	34827000004	8698673418875	LOWPR 1\3 RADIUS ULNA I.L.PLATE (4, 5, 6, 7, 8, 9, 10, 12 HOLES)	8
	34827100004	8698673422971	LOW PROFIE ULNA RADIUS INTERLOCK.PLATE (4, 5, 6, 7, 8, 9, 10, 12 HOLES)	8
	34727000008	8698673418820	LOWPROFILE I.L. OLECRANON PLATE (8, 10 HOLES)	2
	34727500012	8698673423282	LOWPROFILE I.L. OLECRANON PLATE R 12 HOLES	1
	34727600012	8698673423251	LOWPROFILE I.L. OLECRANON PLATE L 12 HOLES	1
	34220000008	8699931033885	PROXIMAL ULNA PLATE R (8, 10, 12 HOLES)	3
	38320700000	8680858408054	PROXIMAL ULNA PLATE L (8, 10, 12 HOLES)	3
	00000301200	8699931023640	UPPER EXTREMITY 2. DESIGN TRAY	1
	31825700008	8698673448568	LDC DISTAL HUMERUS EPICOND.LAT PLATE R (8, 10, 12, HOLES)	3
	31826700008	8698673448612	LDC DISTAL HUMERUS EPICOND.LAT PLATE L (8, 10, 12, HOLES)	3
	32326700011	8698673448766	DISTAL HUMERUS LOCKING Y PLATE L (11, 13, 15 HOLES)	3
	32325700011	8698673448735	DISTAL HUMERUS LOCKING Y PLATE R (11, 13, 15 HOLES)	3
	35325701008	8698673418127	LOWPRO.DIST.ELBOW INT.LATERAL ANAT.PLATE R (8, 9, 10 HOLES)	3
	35326701008	8698673418080	LOWPRO.DIST.ELBOW INT.LATERAL ANAT.PLATE L (8, 9, 10 HOLES)	3
	35227002008	8698673418165	LOWPRO.DIST.ELBOW INT.MEDIAL ANAT.PLATE (8,10,12 HOLES)	3
1	00000301300	8699931023657	UPPER EXTREMITY 3. DESIGN TRAY	1
	31727000004	8698673422889	LC DCP LOCK HUM PLATE (4, 5, 6, 7, 8, 9, 10, 12 HOLES)	8
	36625710004	8698673476332	LOCKING CLAVICLE HOOK PLATE R (4, 6, 8 HOLES)	3
	36626710004	8698673476301	LOCKING CLAVICLE HOOK PLATE L (4, 6, 8 HOLES)	3
	36625700009	8698673483309	DISTAL CLAVICLE PLATES TI R (9, 10, 11 HOLES)	3
	36626700009	8698673483316	DISTAL CLAVICLE PLATES TI L (9, 10, 11 HOLES)	3
	36625700004	8698673425859	LOW PROF. LOCK. CLAVICLE PLATES R (4, 6, 8 HOLES)	3
	36626700004	8698673425880	LOW PROF. LOCK. CLAVICLE PLATES L (4, 6, 8 HOLES)	3
	34620710012	8698673441415	MISS PROXIMAL HUMERUS LOCKING PLATE (12, 14, 16, 17, 19, 21 HOLES)	6
2	00346000001	8698673478046	MISS PROXIMAL HUMERUS MONOBLOCK SCREW GUIDE	1
3	03460000005	8698673468016	MISS PROXIMAL HUMERUS GUIDE LOCKING SCREW	2
4	03460002732	8680858400041	MISS PROX. HUMERUS DOUBLE DRILL GUIDE 2.7-3.2 MM	1
5	02057008032	8680858406630	LOCK. DRILL GUIDE Ø 3.2X80 MM	1
6	08061008027	8698673495067	LOCK. DRILL GUIDE Ø 2.7X80 MM	1
7	03501000203	8699931024838	MISS PROXIMAL HUMERUS K-WIRE SLEEVE Ø1.5 MM	1
8	03110000111	8699931031010	MISS PROX.HUM.REDUCTION DEVICE	1
9	08044000006	8699931030938	WRENCH Ø 6 MM	1
10	08050003060	8699931031003	LENGTH MEASURING DEVICE - MISS PROX.HUM. PLATE	1
11	02160130032	8699931032499	GRAD.DRILL BIT Ø3.2X200 MM (MISS PROX.HUMERUS)	1
12	00000301400	8699931023664	UPPER EXTREMITY 4. DESIGN TRAY	1
13	01191000015	8699931008722	SCREW DRIVER TORQUE 1.5NM	1
14	02006000700	8680858410965	DEPTH GAUGE - UPPER EXT. PLATE (2.7 MM)	1
15	02005000700	8699931028874	DEPTH GAUGE - UPPER EXT. PLATE (3.5 MM & 4.0 MM)	1
16	02010101001	8698673441187	SOFT SCREW DRIVER QUICK SMALL	1
17	02020103025	8699931010930	SCREW DRIVER QUICK TIP 2.5XØ5X130 MM	2
18	02000480017	8699931029253	SCREW DRIVER QUICK HEX. TIP Ø 1.7X80 MM	1
19	02005100014	8699931021844	DRILL GUIDE DOUBLE UPPER EXTREMITY	1
20	02052000020	8699931017588	MODULAR DRILL SLEEVE Ø2 MM	1
21	02052000027	8699931017595	MODULAR DRILL SLEEVE Ø2.7 MM	1
22	02052000032	8699931017601	MODULAR DRILL SLEEVE Ø3.2 MM	1
23	02005805020	8680858425730	THREADED DRILL SLEEVE Ø 2X50 MM FOR SMALL HEAD SCR	2
24	02005700027	8698673495074	LOCK. DRILL GUIDE Ø 2.7X50 MM	2
25	02005100037	8698673447646	THREADED DRILL GUIDE Ø3.2 MM	2
26	22310130027	8698673450424	BONE DRILL 2.7 X 130 MM	1
27	22310200027	8698673450431	BONE DRILL 2.7X200 MM	1
28	22310200032	8698673450455	BONE DRILL 3.2 X 200 MM	2
29	04551000160	8699931028805	K-WIRE TUBE Ø10XØ8X160 MM	1
29	22310130020	8698673450400	BONE DRILL 2.0X130 MM	2
30	04551008190	8699931036756	K-WIRE TUBE Ø10XØ8X190 MM	1
30	23410180015	8698673458086	KIRSCHNER WIRE TROCAR POINT 1.5X180 MM	4
	00000301600	8699931010824	UPPER EXTREMITY - ANKLE SCREW TRAY	1
	00560270180	8699931023152	CONTAINER 560X270X180 MM	1

Plates & Instruments

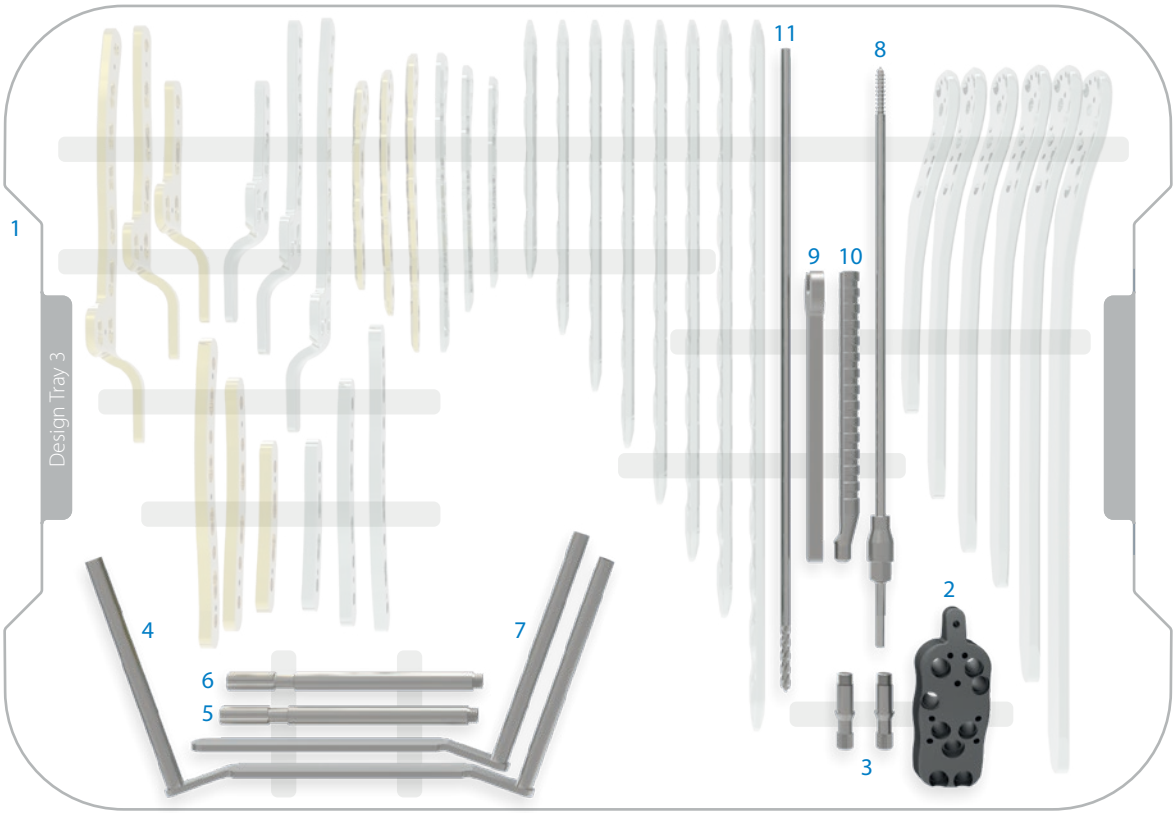

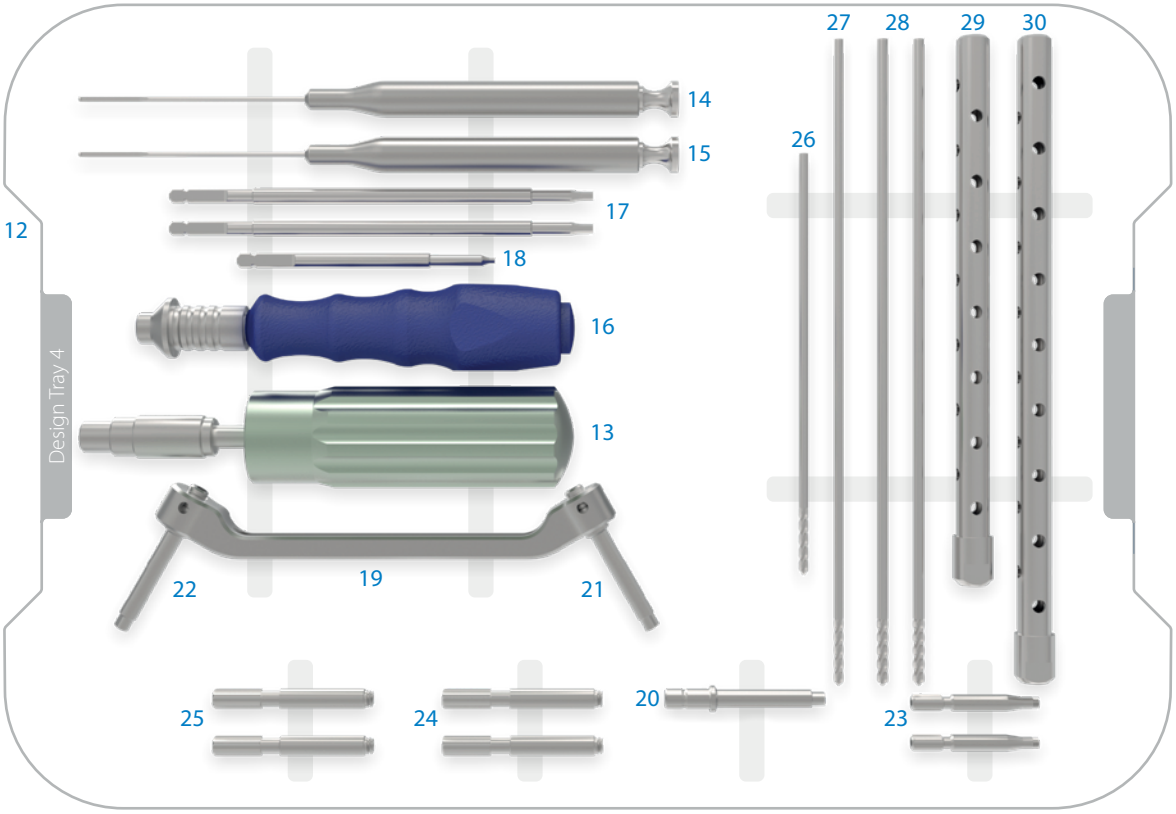

UP-03
SMALL HEAD DISTAL RADIUS PLATES SET

SMALL HEAD DISTAL RADIUS LOCKING PLATES (Volar)

Indications: Dorsally displaced fracture, inta or extra-articular fractures with metaphyseal defect, open joint reconstruction, combination of distal Radius with carpal and metacarpal fracture, corrective osteotomies. Distal Radius plate indicated for fractures, osteotomies and nonunions of distal Radius. Wide Distal Radius Plates are pre-contoured for anatomic fit on the volar aspect of the distal radius.

Multiple locking screw holes in the head of the plate provides additional fixation of the radial and intermediate columns. It is designed with screw trajectories for a wide variety of fracture types. Specifically, two screws are angled to capture the radial styloid and prevent rotation of these fragments.

Plate Profile: Thickness: 2.5 mm, Width: 26.0 mm, Distance between holes: 10.5 mm.

2.4 and 2.7 mm small screws are used in the distal portion of the plates. 3.5 mm cortex screws are used only in the shaft of the plates.

TST Code	Barcode	Description	Side	Material	Length (mm)
34526780013	8699931026474	S. HEAD W. DIST. RADIUS LOCK. PLATE VOLAR 13 HOLE	L	Ti	53
34526780015	8699931026481	S. HEAD W. DIST. RADIUS LOCK. PLATE VOLAR 15 HOLE	L	Ti	74
34526780017	8699931026498	S. HEAD W. DIST. RADIUS LOCK. PLATE VOLAR 17 HOLE	L	Ti	97
34525780013	8699931026443	S. HEAD W. DIST. RADIUS LOCK. PLATE VOLAR 13 HOLE	R	Ti	53
34525780015	8699931026450	S. HEAD W. DIST. RADIUS LOCK. PLATE VOLAR 15 HOLE	R	Ti	74
34525780017	8699931026467	S. HEAD W. DIST. RADIUS LOCK. PLATE VOLAR 17 HOLE	R	Ti	97

13 holes

Recommended Screws 2.4 mm Small Head Lock. Peg, 2.4 mm Lock. Small Head, 2.7 mm Small Head, 2.7 mm Small Head Lock. 3.5 mm Cortical, 3.5 mm Lock. Cortical

SMALL HEAD DISTAL RADIUS Y PLATES (Dorsal)

Indications: Dorsally displaced fractures, intra or extra-articular fractures with metaphyseal defect, open joint reconstruction, combination of distal radius with carpal and metacarpal fractures and corrective osteotomies also Distal Radius Locking Y Plates are indicated for fractures, osteotomies and nonunions of distal radius.

Plate Profile: Thickness: 1.5 mm, Width: 9.0 mm, Distance between holes: 8.5 mm.

Use 2.4 and 2.7 mm small screw in the distal portion of the plates. 3.5 mm cortex screw can be used only in the shaft of the plates.

TST Code	Barcode	Description	Side	Material	Length (mm)
32425700011	8699931005554	S.HEAD DISTAL RADIUS DORSAL LOCK. Y PLATE 11 H	R	Ti	64
32425700012	8699931005547	S.HEAD DISTAL RADIUS DORSAL LOCK. Y PLATE 12 H	R	Ti	72
32426700011	8699931005509	S.HEAD DISTAL RADIUS DORSAL LOCK. Y PLATE 11 H	L	Ti	64
32426700012	8699931005516	S.HEAD DISTAL RADIUS DORSAL LOCK. Y PLATE 12 H	L	Ti	72

11 holes

Recommended Screws 2.4 mm Small Head Lock. Peg, 2.4 mm Lock. Small Head, 2.7 mm Small Head, 2.7 mm Small Head Lock. 3.5 mm Cortical, 3.5 mm Lock. Cortical

SMALL HEAD DISTAL RADIUS L PLATES (Dorsal)

Indications: Fractures, osteotomies, and nonunions of distal radius.

Plate Profile: Thickness: 2.0 mm, Width: 8.5 mm, Distance between holes: 13.0 mm.

2.4 and 2.7 mm small screws are used in the distal portion of the plates. 3.5 mm cortex screws are used only in the shaft of the plates.

TST Code	Barcode	Description	Side	Material	Length (mm)
34525729033	8699931010480	SMALL HEAD DIST.RADIUS DOR.LOCK.L PLT.90° 3+3H	R	Ti	50
34525729034	8699931010497	SMALL HEAD DIST.RADIUS DOR.LOCK.L PLT.90° 3+4H	R	Ti	63
34526729033	8699931010510	SMALL HEAD DIST.RADIUS DOR.LOCK.L PLT.90° 3+3H	L	Ti	50
34526729034	8699931010503	SMALL HEAD DIST.RADIUS DOR.LOCK.L PLT.90° 3+4H	L	Ti	63
34525722043	8699931010527	SMALL HEAD DIST.RADIUS DOR.LOCK.L PLT.20° 4+3H	R	Ti	55
34526722034	8699931010534	SMALL HEAD DIST.RADIUS DOR.LOCK.L PLT.20° 4+3H	L	Ti	55

3+3 holes 90°

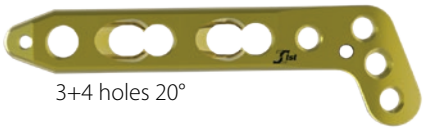

3+4 holes 20°

SMALL HEAD DISTAL RADIUS STRAIGHT PLATES

Indications: Dorsal L-plates and straight plates are used in the dorsal two-plate technique, which provides a strong construct for complex distal radius fractures, avoid removal of Lister's tubercle and decrease tendon and soft tissue irritation. Two-plate technique of dorsal fixation of distal radius fractures offers increased stabilization due to the 70 – 90° angle between the two plates. The dorsoradial plate buttresses the radial column and a dorsoulnar plate supports the intermediate column.

Straight plates are pre-contoured to fit on to the radial column and have notched tip that allows these plates to fit on to the radial styloid adjacent for temporary K-wire fixation.

Plate Profile: Thickness: 2.5 mm, Width: 9.0 mm.

TST Code	Barcode	Description	Material	Length (mm)
34520700005	8698673462731	DISTAL RADIUS STRAIGHT PLATE LOCK. 5 H	Ti	50
34520700006	8698673462748	DISTAL RADIUS STRAIGHT PLATE LOCK. 6 H	Ti	62

6 holes

Recommended Screws 2.4 mm Small Head Lock. Peg, 2.4 mm Lock. Small Head, 2.7 mm Small Head, 2.7 mm Small Head Lock. 3.5 mm Cortical, 3.5 mm Lock. Cortical

SMALL HEAD DISTAL RADIUS LOCKING T PLATES (Volar)

Indications: Simple intra or extra-articular fractures and also indicated for fractures, osteotomies and nonunions of distal radius.

Distal Radius T-Plate is pre-contoured for anatomic fit of the volar aspect to the distal radius, so that the plate placement is away from the articular surface. Diverging screw angles secure the radial styloid and other distal fragments.

Plate Profile: Thickness: 2.0 mm, Width: 9.0 mm, Distance between holes: 14.0 mm.

2.4 and 2.7 mm small screws are used in the distal portion of the plates. 3.5 mm cortex screws are used only in the shaft of the plates.

TST Code	Barcode	Description	Side	Material	Length (mm)
34526750503	8699931010442	SMALL HEAD DIST.RADIUS LOCK.T PLT.(VOLAR) 5+3H	R	Ti	64
34526750405	8699931010459	SMALL HEAD DIST.RADIUS LOCK.T PLT.(VOLAR) 5+5H	R	Ti	92
34525750503	8699931010473	SMALL HEAD DIST.RADIUS LOCK.T PLT.(VOLAR) 5+3H	L	Ti	64
34525750505	8699931010466	SMALL HEAD DIST.RADIUS LOCK.T PLT.(VOLAR) 5+5H	L	Ti	92

5+5 holes

Recommended Screws 2.4 mm Small Head Lock. Peg, 2.4 mm Lock. Small Head, 2.7 mm Small Head, 2.7 mm Small Head Lock. 3.5 mm Cortical, 3.5 mm Lock. Cortical

Plates & Screws

TST Code	Barcode	Description	Quantity
00000303100	8699931023701	DIST. RADIUS 1. DESIGN TRAY	1
34526780013	8699931026474	S. HEAD WIDE DIST.RADIUS LOCK.PLATE TI VOLAR L 13H	1
34526780015	8699931026481	S. HEAD WIDE DIST.RADIUS LOCK.PLATE TI VOLAR L 15H	1
34526780017	8699931026498	S. HEAD WIDE DIST.RADIUS LOCK.PLATE TI VOLAR L 17H	1
34525780013	8699931026443	S. HEAD WIDE DIST.RADIUS LOCK.PLATE TI VOLAR R 13H	1
34525780015	8699931026450	S. HEAD WIDE DIST.RADIUS LOCK.PLATE TI VOLAR R 15H	1
34525780017	8699931026467	S. HEAD WIDE DIST.RADIUS LOCK.PLATE TI VOLAR R 17H	1
34526750503	8699931010442	SMALL HEAD DIST.RADIUS LOCK.T PLT.TI(VOLAR) R 5+3H	1
34526750405	8699931010459	SMALL HEAD DIST.RADIUS LOCK.T PLT.TI(VOLAR) R 5+5H	1
34525750503	8699931010473	SMALL HEAD DIST.RADIUS LOCK.T PLT.TI(VOLAR) L 5+3H	1
34525750505	8699931010466	SMALL HEAD DIST.RADIUS LOCK.T PLT.TI(VOLAR) L 5+5H	1
32425700011	8699931005554	S.HEAD DISTAL RADIUS DORSAL LOCK.Y PLATE TI R 11 H	1
32425700012	8699931005547	S.HEAD DISTAL RADIUS DORSAL LOCK.Y PLATE TI R 12 H	1
32426700011	8699931005509	S.HEAD DISTAL RADIUS DORSAL LOCK.Y PLATE TI L 11 H	1
32426700012	8699931005516	S.HEAD DISTAL RADIUS DORSAL LOCK.Y PLATE TI L 12 H	1
34525729033	8699931010480	SMALL HEAD DIST.RADIUS DOR.LOCK.L PLT.90°TI R 3+3H	1
34525729034	8699931010497	SMALL HEAD DIST.RADIUS DOR.LOCK.L PLT.90°TI R 3+4H	1
34526729033	8699931010510	SMALL HEAD DIST.RADIUS DOR.LOCK.L PLT.90°TI L 3+3H	1
34526729034	8699931010503	SMALL HEAD DIST.RADIUS DOR.LOCK.L PLT.90°TI L 3+4H	1
34526722034	8699931010534	SMALL HEAD DIST.RADIUS DOR.LOCK.L PLT.20°TI L 4+3H	1
34525722043	8699931010527	SMALL HEAD DIST.RADIUS DOR.LOCK.L PLT.20°TI R 4+3H	1
34520700005	8698673462731	DISTAL RADIUS STRAIGHT PLATE LOCK. TI 5 HOLES	1
34520700006	8698673462748	DISTAL RADIUS STRAIGHT PLATE LOCK. TI 6 HOLES	1

SMALL HEAD LOCK. SCREW Ti Ø 2.4 MM

TST Code	Barcode	Length	Qty
24627120024	8699931006537	12	5
24627140024	8699931006520	14	5
24627160024	8699931006513	16	10
24627180024	8699931006506	18	10
24627200024	8699931006490	20	10
24627220024	8699931006483	22	10
24627240024	8699931006421	24	5
24627260024	8699931005837	26	5
24627280024	8699931005844	28	5
24627300024	8699931005851	30	5
24627320024	8699931005868	32	5

SMALL HEAD LOCK. SCREW Ti Ø 2.7 MM

TST Code	Barcode	Length	Qty
24627120027	8699931007220	12	5
24627140027	8699931007213	14	5
24627160027	8699931007206	16	10
24627180027	8699931007190	18	10
24627200027	8699931007183	20	10
24627220027	8699931007176	22	10
24627240027	8699931005912	24	5
24627260027	8699931005929	26	5
24627280027	8699931005936	28	5
24627300027	8699931005943	30	5
24627320027	8699931005950	32	5

CORTICAL LOCK. SCREW Ti Ø 3.5 MM

TST Code	Barcode	Length	Qty
20127120035	8698673417571	12	5
20127140035	8698673417588	14	5
20127160035	8698673417595	16	5
20127180035	8698673417601	18	5
20127200035	8698673417618	20	5
20127220035	8698673417625	22	5
20127240035	8698673417632	24	5
20127260035	8698673417649	26	5
20127280035	8698673417656	28	5
20127300035	8698673417663	30	5

SMALL HEAD LOCK. PEG SCREW Ti Ø 2.4 MM

TST Code	Barcode	Length	Qty
24627122024	8699931013658	12	3
24627142024	8699931013665	14	3
24627162024	8699931013672	16	3
24627182024	8699931013689	18	3
24627202024	8699931013696	20	3
24627222024	8699931013702	22	3
24627242024	8699931006353	24	3
24627262024	8699931006346	26	3
24627282024	8699931006360	28	3
24627302024	8699931006377	30	3

SMALL HEAD SCREW Ti Ø 2.7 MM

TST Code	Barcode	Length	Qty
24620120027	8699931006841	12	4
24620140027	8699931006834	14	4
24620160027	8699931006827	16	8
24620180027	8699931006810	18	8
24620200027	8699931006803	20	8
24620220027	8699931006797	22	8
24620240027	8699931006162	24	4
24620260027	8699931006155	26	4
24620280027	8699931006148	28	4
24620300027	8699931006131	30	4
24620320027	8699931006124	32	4

CORTICAL SCREW Ti Ø 3.5 MM

TST Code	Barcode	Length	Qty
20120120035	8698673417076	12	4
20120140035	8698673417083	14	4
20120160035	8698673417090	16	4
20120180035	8698673417106	18	4
20120200035	8698673417113	20	4
20120220035	8698673417120	22	4
20120240035	8698673417137	24	4
20120260035	8698673417144	26	4
20120280035	8698673417151	28	4
20120300035	8698673417168	30	4

Instruments

No	TST Code	Barcode	Description	Quantity
1	00000303200	8699931023718	DIST. RADIUS 2. DESIGN TRAY	1
2	01191000015	8699931008722	SCREW DRIVER TORQUE 1.5NM	1
3	02010101001	8698673441187	SOFT SCREW DRIVER QUICK SMALL	1
4	02020103025	8699931010930	SCREW DRIVER QUICK TIP 2.5XØ5X130 MM	1
5	02000480017	8699931029253	SCREW DRIVER QUICK HEX. TIP Ø 1.7X80 MM	1
6	23410100112	8699931026337	KIRSCHNER WIRE TROCAR POINT 1.2X100 MM	6
6	04550129140	8699931032352	K-WIRE TUBE Ø12XØ9X140 MM	2
6	22310130020	8698673450400	BONE DRILL 2.0X130 MM	2
6	22310130027	8698673450424	BONE DRILL 2.7 X 130 MM	2
7	00345112027	8699931010541	MISS DISTAL RADIUS DOUBLE DRILL GUIDE Ø 2.7-2 MM	1
8	02005800027	8699931029574	THREADED DRILL SLEEVE Ø 2.7X40 MM	2
9	02005805020	8680858425730	THREADED DRILL SLEEVE Ø 2X50 MM FOR SMALL HEAD SCR	2
10	02005000500	8698673497023	DEPTH GAUGE (0-50 MM)	1
11	00000303400	8699931023732	DISTAL RADIUS SCREW TRAY	1
	00270270140	8699931024524	CONTAINER 270X270X140 MM	1

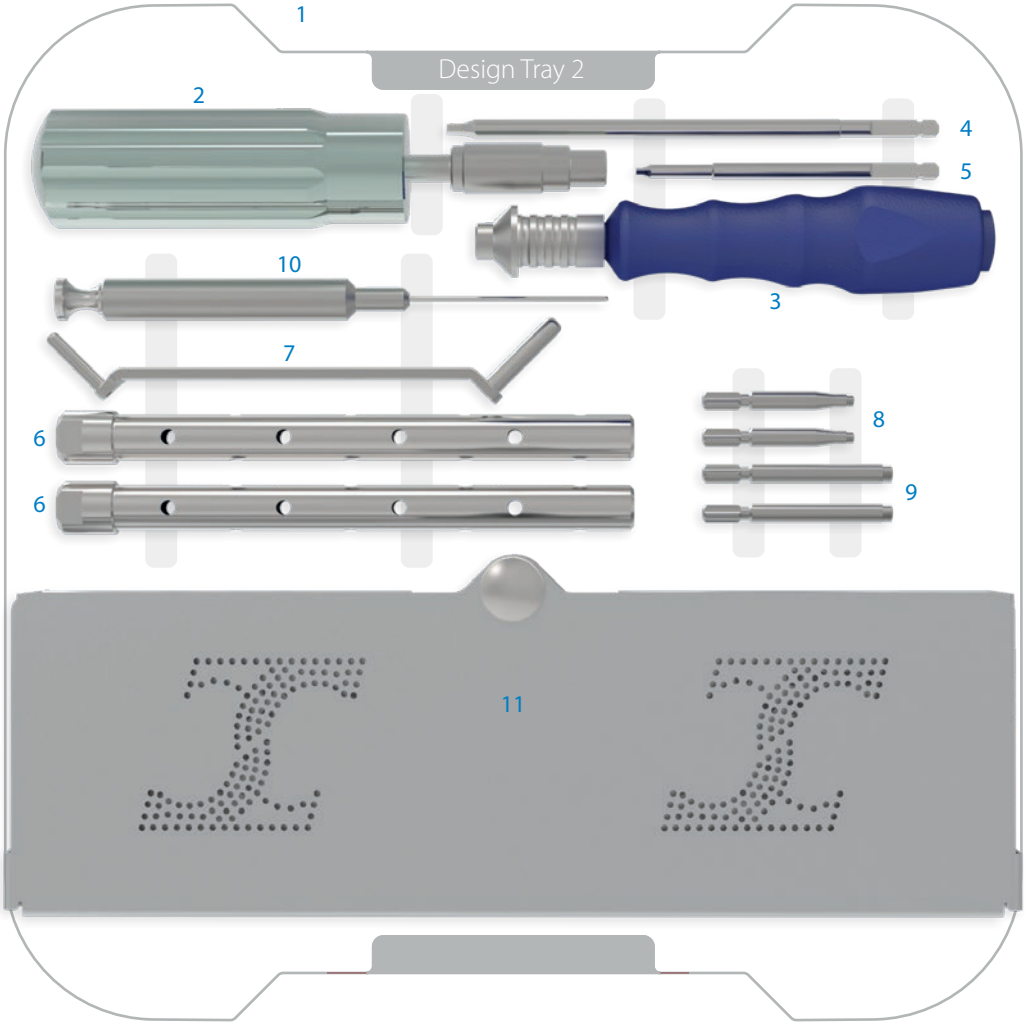

UP-04
SMALL DISTAL RADIUS VARIABLE ANGLE LOCKING (VAL) PLATES SET

UP-04 Distal Radius Variable Angle Locking (VAL) Plates Set

DISTAL RADIUS VAL PLATES (Narrow)

Indications: Intra and extra-articular fractures and osteotomies of the distal Radius.

Plate Profile: Thickness: 2.5 mm, Prox. Width: 9.0 mm, Distal Width: 25.0 mm, Distance between holes: 10.5 mm.

2.4 mm variable angled screws allow up to 15 degrees off axis angulation. VAL screws provide fixation options for a variety of fracture types.

TST Code	Barcode	Description	Side	Material	Length (mm)
34525300011	8680858423224	SMALL DIST. RADIUS V.PLATE TI (NARROW) R SHORT	R	Ti	50
34525300013	8680858423231	SMALL DIST. RADIUS V.PLATE TI (NARROW) R	R	Ti	61
34525300015	8680858423248	SMALL DIST. RADIUS V.PLATE TI (NARROW) R LONG	R	Ti	81
34526300011	8680858423255	SMALL DIST. RADIUS V.PLATE TI (NARROW) L SHORT	L	Ti	50
34526300013	8680858423262	SMALL DIST. RADIUS V.PLATE TI (NARROW) L	L	Ti	61
34526300015	8680858423279	SMALL DIST. RADIUS V.PLATE TI (NARROW) L LONG	L	Ti	81

Recommended Screws 2.4 mm Mini Screw 2.4 mm VAL Screw 3.5 mm Cortical 3.5 mm Lock. Cortical

UP-04 Distal Radius Variable Angle Locking (VAL) Plates Set

DISTAL RADIUS VAL PLATES (Wide)

Indications: Intra and extra-articular fractures and osteotomies of the distal Radius.

Plate Profile: Thickness: 2.5 mm, Prox. Width: 9.0 mm, Distal Width: 29.0 mm, Distance between holes: 10.5 mm.

2.4 mm variable angled screws allow up to 15 degrees off axis angulation. VAL screws provide fixation options for a variety of fracture types.

TST Code	Barcode	Description	Side	Material	Length (mm)
34525100013	8680858423101	SMALL DIST. RADIUS V.PLATE TI (WIDE) R SHORT	R	Ti	50
34525100015	8680858423118	SMALL DIST. RADIUS V.PLATE TI (WIDE) R	R	Ti	61
34525100017	8680858423125	SMALL DIST. RADIUS V.PLATE TI (WIDE) R LONG	R	Ti	81
34526100013	8680858423132	SMALL DIST. RADIUS V.PLATE TI (WIDE) L SHORT	L	Ti	50
34526100015	8680858423149	SMALL DIST. RADIUS V.PLATE TI (WIDE) L	L	Ti	61
34526100017	8680858423156	SMALL DIST. RADIUS V.PLATE TI (WIDE) L LONG	L	Ti	81

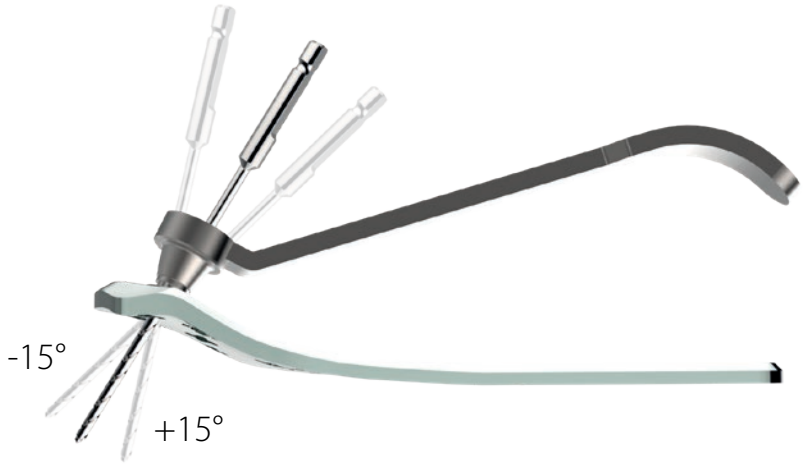

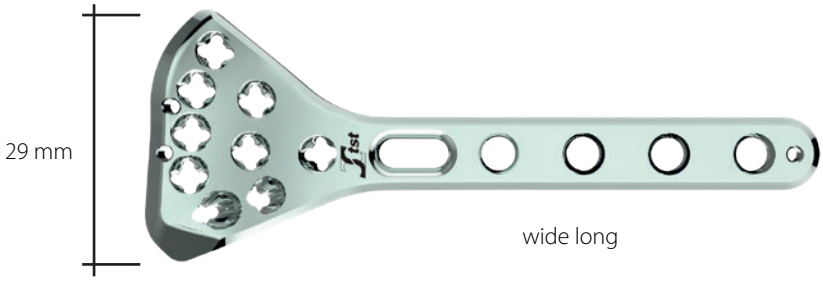

Recommended Screws 2.4 mm Mini Screw 2.4 mm VAL Screw 3.5 mm Cortical 3.5 mm Lock. Cortical

Plates & Screws

TST Code	Barcode	Description	Quantity
00000303100	**8699931023701**	**DIST. RADIUS 1. DESIGN TRAY**	**1**
34525300011	8680858423224	SMALL DIST. RADIUS V.PLATE TI (NARROW) R SHORT	1
34525300013	8680858423231	SMALL DIST. RADIUS V.PLATE TI (NARROW) R	1
34525300015	8680858423248	SMALL DIST. RADIUS V.PLATE TI (NARROW) R LONG	1
34526300011	8680858423255	SMALL DIST. RADIUS V.PLATE TI (NARROW) L SHORT	1
34526300013	8680858423262	SMALL DIST. RADIUS V.PLATE TI (NARROW) L	1
34526300015	8680858423279	SMALL DIST. RADIUS V.PLATE TI (NARROW) L LONG	1
34525100013	8680858423101	SMALL DIST. RADIUS V.PLATE TI (WIDE) R SHORT	1
34525100015	8680858423118	SMALL DIST. RADIUS V.PLATE TI (WIDE) R	1
34525100017	8680858423125	SMALL DIST. RADIUS V.PLATE TI (WIDE) R LONG	1
34526100013	8680858423132	SMALL DIST. RADIUS V.PLATE TI (WIDE) L SHORT	1
34526100015	8680858423149	SMALL DIST. RADIUS V.PLATE TI (WIDE) L	1
34526100017	8680858423156	SMALL DIST. RADIUS V.PLATE TI (WIDE) L LONG	1

VAL SCREW Ø 2.4 MM

TST Code	Barcode	Length	Qty
20127208027	8699931035391	12 mm	5
20127228027	8699931035407	14 mm	5
20127248027	8699931035414	16 mm	5
20127268027	8699931035421	18 mm	5
20127288027	8699931035438	20 mm	5
20127308027	8699931035445	22 mm	5
20127328027	8699931035452	24 mm	5
20127348027	8699931035469	26 mm	5
20127368027	8699931035476	28 mm	5
20127388027	8699931035483	30 mm	5

MINI SCREW Ø 2.4 MM

TST Code	Barcode	Length	Qty
24220120030	8698673491779	12 mm	3
24220140030	8698673491786	14 mm	3
24220160030	8698673491793	16 mm	3
24220180030	8698673491809	18 mm	3
24220200030	8698673491816	20 mm	3
24220220030	8698673491823	22 mm	3
24220240030	8698673491830	24 mm	3
24220260030	8698673491847	26 mm	3
24220280030	8698673491854	28 mm	3
24220300030	8698673491861	30 mm	3

LOW PROF.CORT.LOCK.SCR.SELFT Ø 3.5 MM

TST Code	Barcode	Length	Qty
20127120035	8698673417571	12 mm	5
20127140035	8698673417588	14 mm	5
20127160035	8698673417595	16 mm	5
20127180035	8698673417601	18 mm	5

LOW PROF.CORT. SELFT SCR. Ø 3.5 MM

TST Code	Barcode	Length	Qty
20120120035	8698673417076	12 mm	2
20120140035	8698673417083	14 mm	2
20120160035	8698673417090	16 mm	2
20120180035	8698673417106	18 mm	2

Instruments

No	TST Code	Barcode	Description	Quantity
1	**00000303200**	**8699931023718**	**DIST. RADIUS 2. DESIGN TRAY**	**1**
2	01191000008	8680858442362	SCREW DRIVER TORQUE 0.8 NM	1
3	02010101001	8698673441187	SOFT SCREW DRIVER QUICK SMALL	1
4	02020103025	8699931010930	SCREW DRIVER QUICK TIP 2.5XØ5X130 MM	1
5	02025010323	8699931010947	SCREWDRIVER QUICK TIP T8X80MM	2
6	04550129140	8699931032352	K-WIRE TUBE Ø12XØ9X140 MM	2
	23410100112	8699931026337	KIRSCHNER WIRE TROCAR POINT 1.2X100 MM	6
	22310130020	8698673450400	BONE DRILL 2.0X130 MM	2
	22310130027	8698673450424	BONE DRILL 2.7 X 130 MM	2
7	02005800027	8699931029574	THREADED DRILL SLEEVE Ø 2.7X40 MM	2
8	02005900002	8699931028041	VAL DRILL SLEEVE Ø 2.0 MM	1
9	08040108165	8699931019025	STABL VAL DRILL SLEEVE Ø 2.0 MM	1
10	02005000500	8698673497023	DEPTH GAUGE (0-50 MM)	1
11	**00000303400**	**8699931023732**	**DISTAL RADIUS SCREW TRAY**	**1**
	00270270140	**8699931024524**	**CONTAINER 270X270X140 MM**	**1**

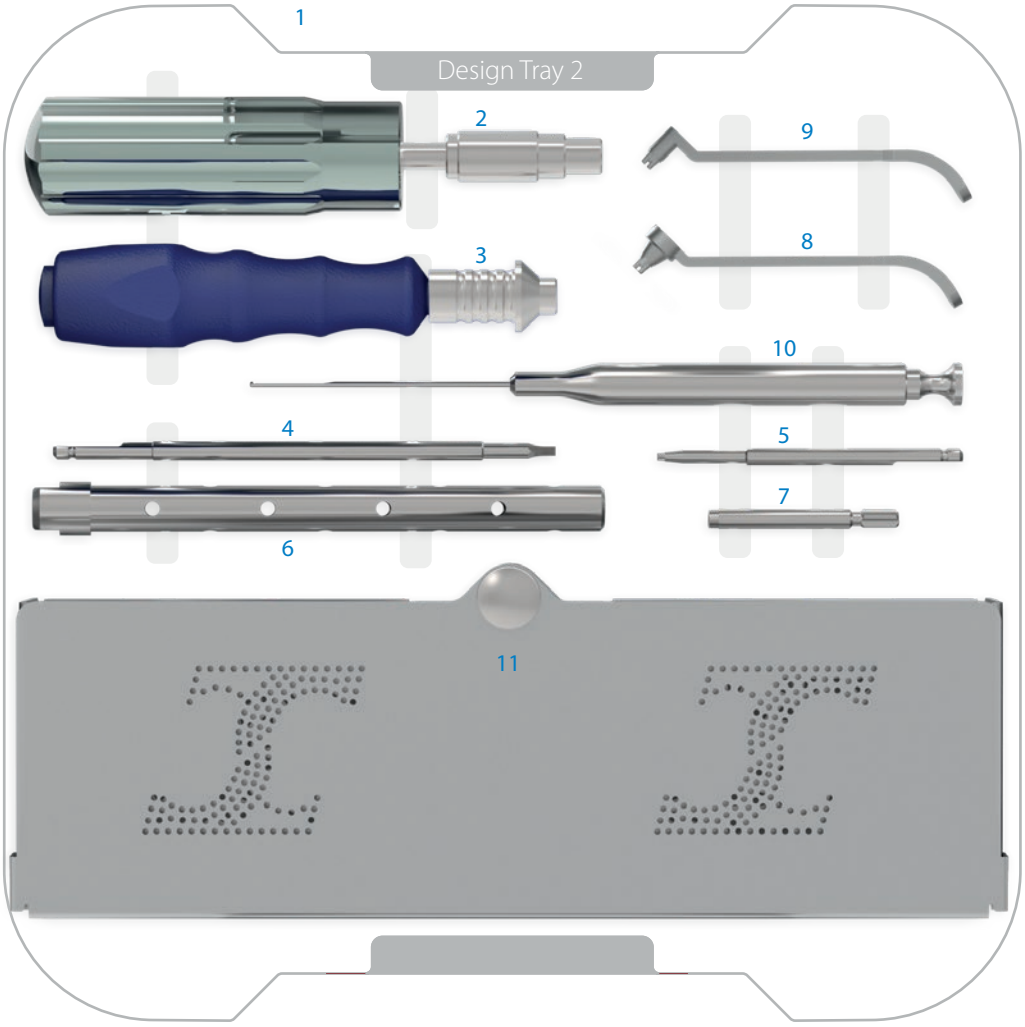

UP-16
MINI PLATES HAND 1.5, 2.0, 2.3 MM SET

MINI PLATES HAND 1.5 MM

Indications: Mini Plates are designed in accordance with all phalanges and metacarpal bone anatomy include complex and joint internal fractures; It can be applied in transverse and spiral fractures, diaphyseal fractures, segmental fracture and dislocated fractures. In addition, ligament/bone avulsions and DIP can be used in PIP arthrodesis.

Mini Plates Hand Set has increased the angular fixation of the fracture and anatomic reduction with locking screws with ±15° variable angle locking. Mini plates 1.5 Implant Box; 1.5 mm diameter locking and non locking screws and their plate consists of drills.

	TST Code	Barcode	Description	Qty
standard 0.6 mm plate	36120061016	8680858435821	1.5 MINI OFFSET PLATE 16 HOLES	2
	36120060016	8680858435869	1.5 MINI STRAIGHT PLATE 16 HOLES	2
	36120060004	8680858435876	1.5 MINI STRAIGHT PLATE 4 HOLES	2
	36120060306	8680858436002	1.5 MINI Y PLATE 6 HOLES	2
	36126060205	8680858435807	1.5 MINI L PLATE 5 HOLES L	2
	36125060205	8680858435814	1.5 MINI L PLATE 5 HOLES R	2
	36120060107	8680858435913	1.5 MINI T PLATE 6 HOLES	2
	36120060110	8680858435906	1.5 MINI T PLATE 10 HOLES	2
	36126062005	8680858435784	1.5 MINI HOOK PLATE 5 HOLES L	2
	36125062005	8680858435791	1.5 MINI HOOK PLATE 5 HOLES R	2
	36120064006	8680858435852	1.5 MINI RECTANGULAR PLATE 6 HOLES	2
	36126065006	8680858435739	1.5 MINI ANGLED PLATE 6 HOLES L	2
	36125065006	8680858435746	1.5 MINI ANGLED PLATE 6 HOLES R	2
	36120063010	8680858435937	1.5 MINI TRAPEZOID PLATE 10 HOLES	2
	36120062001	8680858435777	1.5 MINI HOOK PLATE 1 HOLE	2
locking 0.8 mm plate	36120708004	8680858436057	1.5 LOC. MINI STRAIGHT PLATE 4 HOLES	2
	36120708108	8680858436064	1.5 LOC. MINI T PLATE 8 HOLES	2
	36120708606	8680858436033	1.5 LOC. MINI ROTATION PLATE 6 HOLES	2
	36120708909	8680858436019	1.5 LOC. MINI DOUBLE ROW T PLATE 9 HOLES	2
	36120708404	8680858436026	1.5 LOC. MINI RECTANGULAR PLATE 4 HOLES	2
	36120708306	8680858436088	1.5 LOC. MINI TRAPEZOID PLATE 6 HOLES	2
	36120708310	8680858436071	1.5 LOC. MINI TRAPEZOID PLATE 10 HOLES	2
	36120708806	8680858436040	1.5 LOC. MINI SCAPHOID PLATE 6 HOLES	2

1.5 Mini Plates (0.6 mm plate thickness)

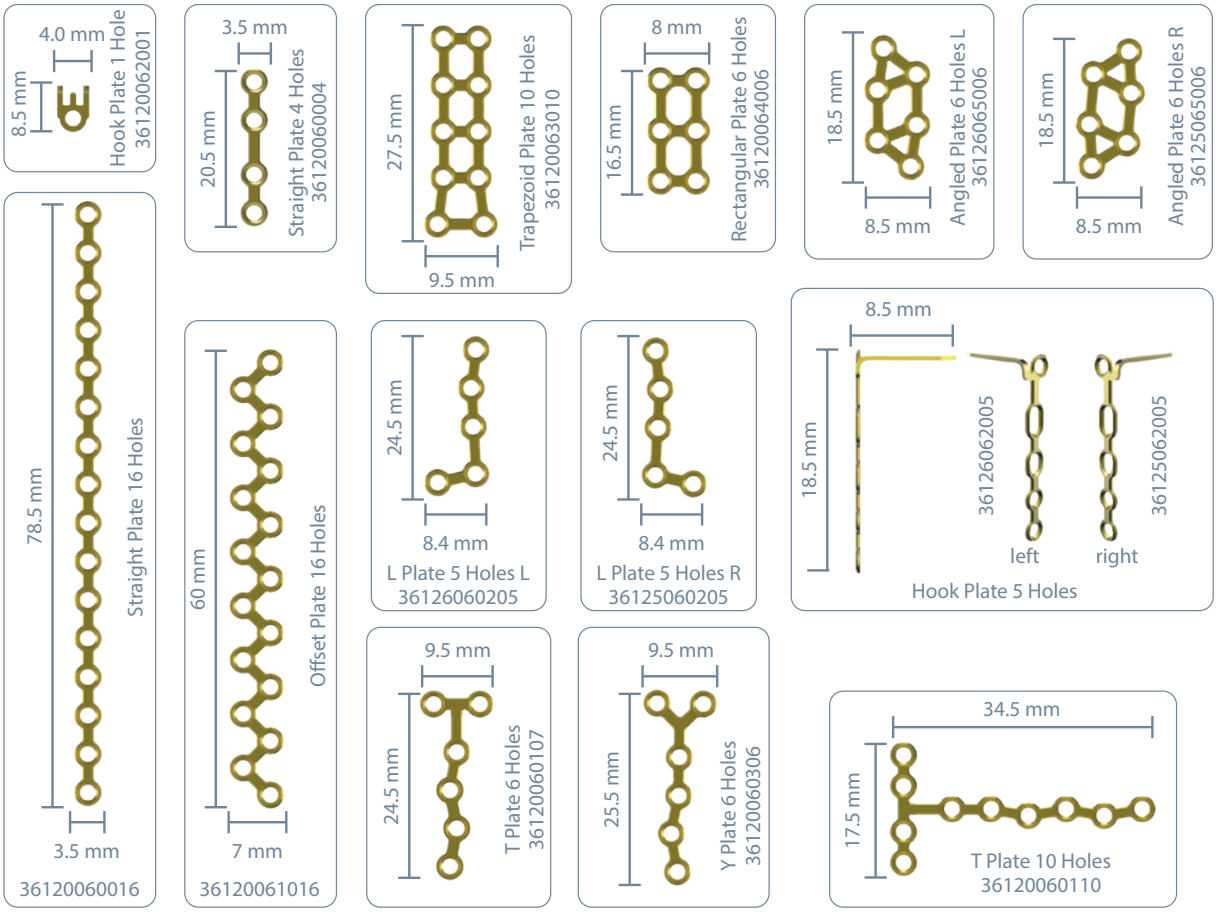

1.5 Locking Mini Plates (0.8 mm plate thickness)

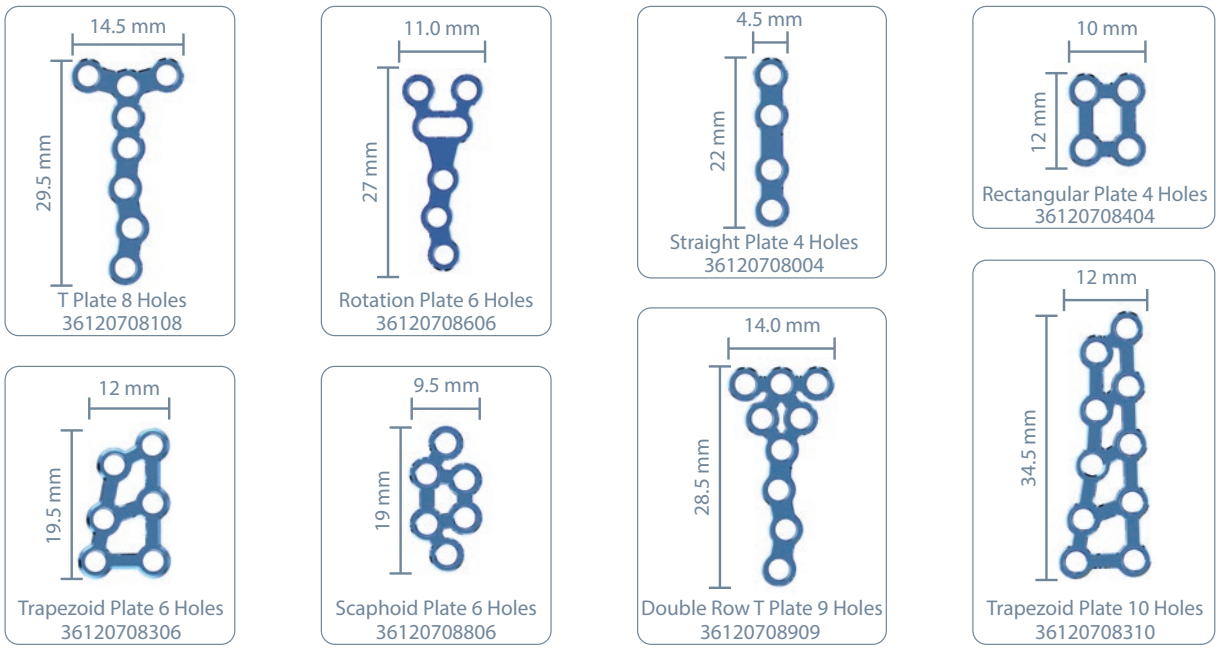

MINI PLATES HAND 2.0 MM

Indications: Mini Plates are designed in accordance with all phalanges and metacarpal bone anatomy include complex and joint internal fractures; It can be applied in transverse and spiral fractures, diaphyseal fractures, segmental fracture and dislocated fractures. In addition, ligament/bone avulsions and DIP can be used in PIP arthrodesis.

Mini Plates Hand Set has increased the angular fixation of the fracture and anatomic reduction with locking screws with ±15° variable angle locking. Mini Plate 2.0 Implant Box; It consists of 2.0 mm diameter locking and non-locking screws and their plates and drills.

	TST Code	Barcode	Description	Qty
standard 2.0 mm plate	36120100016	8680858436309	2.0 / 2.3 MINI STRAIGHT PLATE 16 HOLES	2
	36120100004	8680858436316	2.0 / 2.3 MINI STRAIGHT PLATE 4 HOLES	2
	36120100307	8680858436460	2.0 / 2.3 MINI Y PLATE 7 HOLES	2
	36120100111	8680858436330	2.0 / 2.3 MINI T PLATE 11 HOLES	2
	36120100112	8680858436347	2.0 / 2.3 MINI T PLATE 12 HOLES	2
	36126102006	8680858436149	2.0 / 2.3 MINI HOOK PLATE 6 HOLES L	2
	36125102006	8680858436156	2.0 / 2.3 MINI HOOK PLATE 6 HOLES R	2
	36120104006	8680858436293	2.0 / 2.3 MINI RECTANGULAR PLATE 6 HOLES	2
	36126103006	8680858436439	2.0 / 2.3 MINI TRAPEZOID PLATE 6 HOLES L	2
	36125103006	8680858436446	2.0 / 2.3 MINI TRAPEZOID PLATE 6 HOLES R	2
	36126105006	8680858436101	2.0 / 2.3 MINI ANGLED PLATE 6 HOLES L	2
	36125105006	8680858436118	2.0 / 2.3 MINI ANGLED PLATE 6 HOLES R	2
	36120103008	8680858436453	2.0 / 2.3 MINI TRAPEZOID PLATE 8 HOLES	2
	36126105008	8680858436125	2.0 / 2.3MINI ANGLED PLATE 8 HOLES L	2
	36125105008	8680858436132	2.0 / 2.3MINI ANGLED PLATE 8 HOLES R	2
	36120103010	8680858436378	2.0 / 2.3MINI TRAPEZOID PLATE 10 HOLES	2
locking 2.0 mm plate	36120710006	8680858436613	2.0 LOC. MINI STRAIGHT PLATE 6 HOLES	2
	36120710307	8680858436668	2.0 LOC. MINI Y PLATE 7 HOLES	2
	36120710107	8680858436651	2.0 LOC. MINI T PLATE 7 HOLES	2
	36126710206	8680858436514	2.0 LOC. MINI L PLATE 6 HOLES L	2
	36125710206	8680858436521	2.0 LOC. MINI L PLATE 6 HOLES R	2
	36120710306	8680858436699	2.0 LOC. TRAPEZOID PLATE 6 HOLES	2
	36126710306	8680858436705	2.0 LOC. TRAPEZOID PLATE 6 HOLES L	2
	36125710306	8680858436712	2.0 LOC. TRAPEZOID PLATE 6 HOLES R	2
	36120710312	8680858436682	2.0 LOC. TRAPEZOID PLATE 12 HOLES	2

variable angle locking

2.0 Mini Plates (1.0 mm plate thickness)

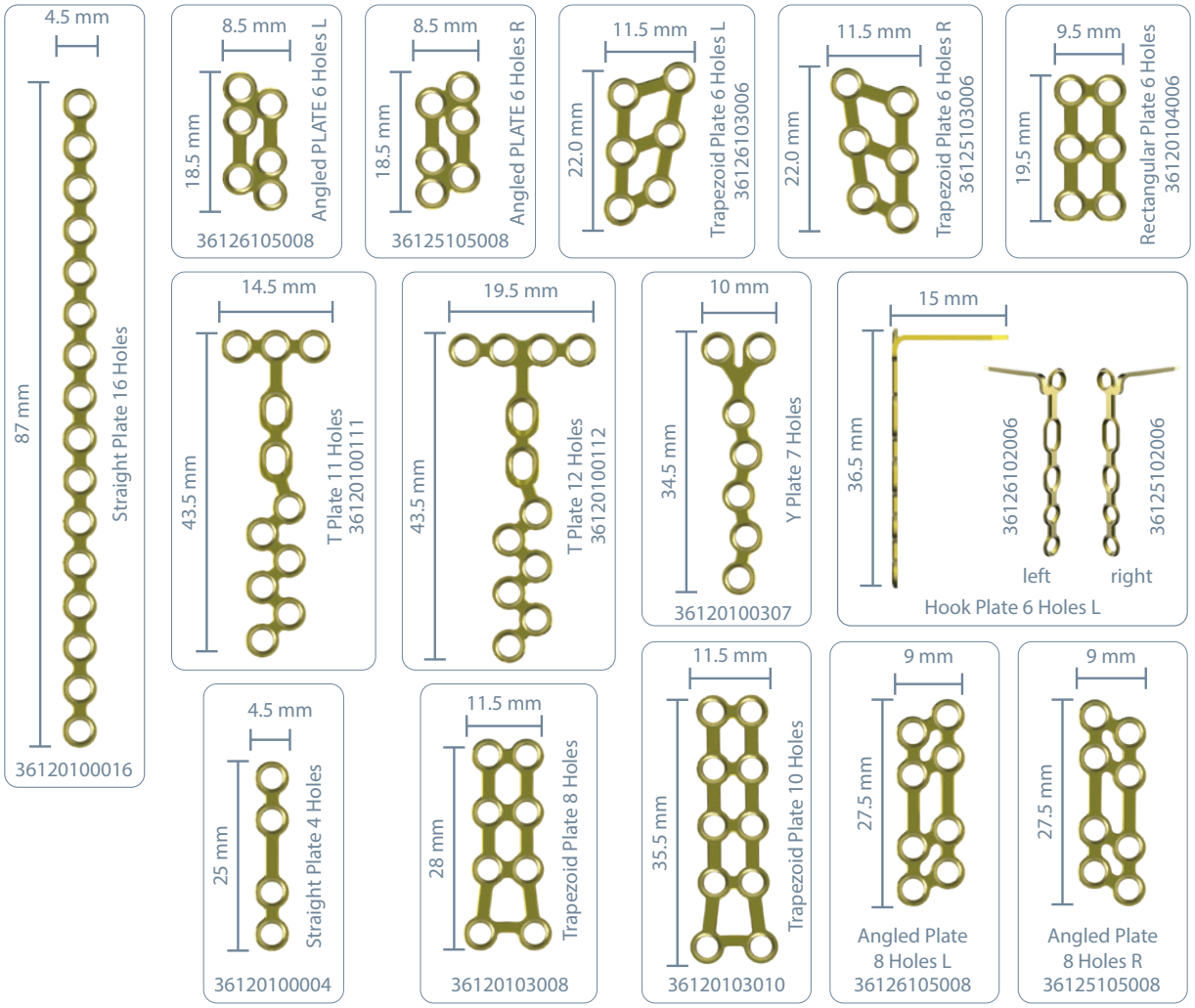

2.0 Locking Mini Plates (1.0 mm plate thickness)

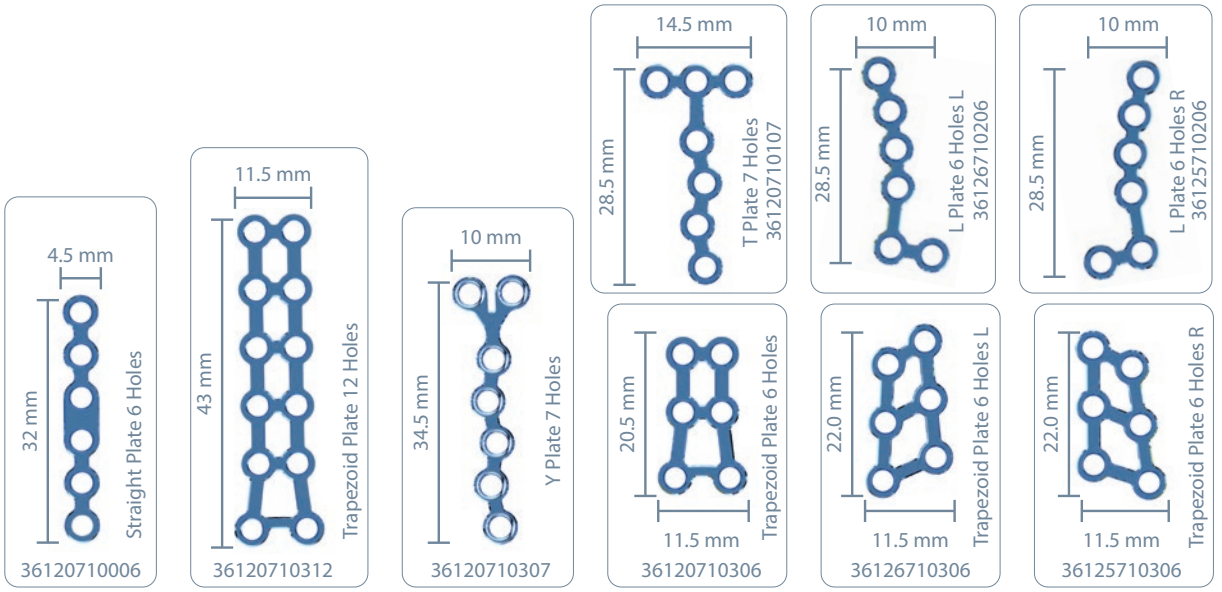

MINI PLATES HAND 2.0, 2.3 MM

Indications: Mini Plates are designed in accordance with all phalanges and metacarpal bone anatomy include complex and joint internal fractures; It can be applied in transverse and spiral fractures, diaphyseal fractures, segmental fracture and dislocated fractures. In addition, ligament/bone avulsions and DIP can be used in PIP arthrodesis.

Mini Plates Hand Set has increased the angular fixation of the fracture and anatomic reduction with locking screws with ±15° variable angle locking. Mini Plates 2.0-2.3 Implant Box: It consists of 2.0 mm diameter locking and 2.3 mm diameter non-locking screws and their respective plates and drills.

	TST Code	Barcode	Description	Qty
standard 2.3 mm plate	36120130005	8680858436231	2.0 / 2.3 MINI MC STRAIGHT PLATE 5 HOLES	2
	36120130006	8680858436248	2.0 / 2.3 MINI MC STRAIGHT PLATE 6 HOLES	2
	36120130008	8680858436255	2.0 / 2.3 MINI MC STRAIGHT PLATE 8 HOLES	2
	36126130210	8680858436187	2.0 / 2.3 MINI MC L PLATE 10 HOLES L	2
	36125130210	8680858436194	2.0 / 2.3 MINI MC L PLATE 10 HOLES R	2
	36120130110	8680858436262	2.0 / 2.3 MINI MC T PLATE 10 HOLES	2
locking 2.0 mm plate	36120713004	8680858436576	2.0 LOC. MINI STRAIGHT 1.2 MM PLATE 4 HOLES	2
	36120713008	8680858436606	2.0 LOC. MINI STRAIGHT 1.2 MM PLATE 8 HOLES	2
	36126713210	8680858436477	2.0 LOC. MINI L 1.2 MM PLATE 10 HOLES L	2
	36125713210	8680858436484	2.0 LOC. MINI L 1.2 MM PLATE 10 HOLES R	2
	36120713110	8680858436620	2.0 LOC. MINI T 1.2 MM PLATE 10 HOLES	2
	36120713406	8680858436552	2.0 LOC. MINI RECTANGULAR PLATE 6 HOLES	2
	36120713410	8680858436538	2.0 LOC. MINI RECTANGULAR PLATE 10 HOLES	2

±15° variable angle locking

2.3 Mini MC Plates (1.2 mm plate thickness)

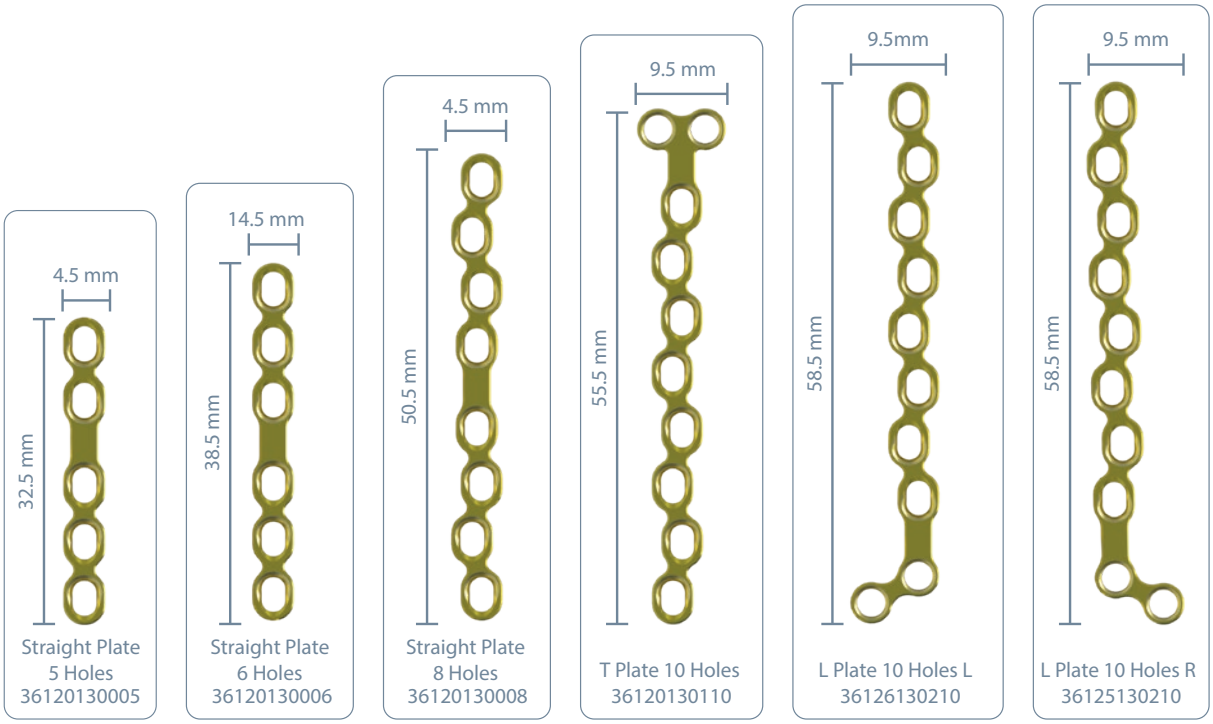

2.0 Locking Mini Plates (1.2 mm plate thickness)

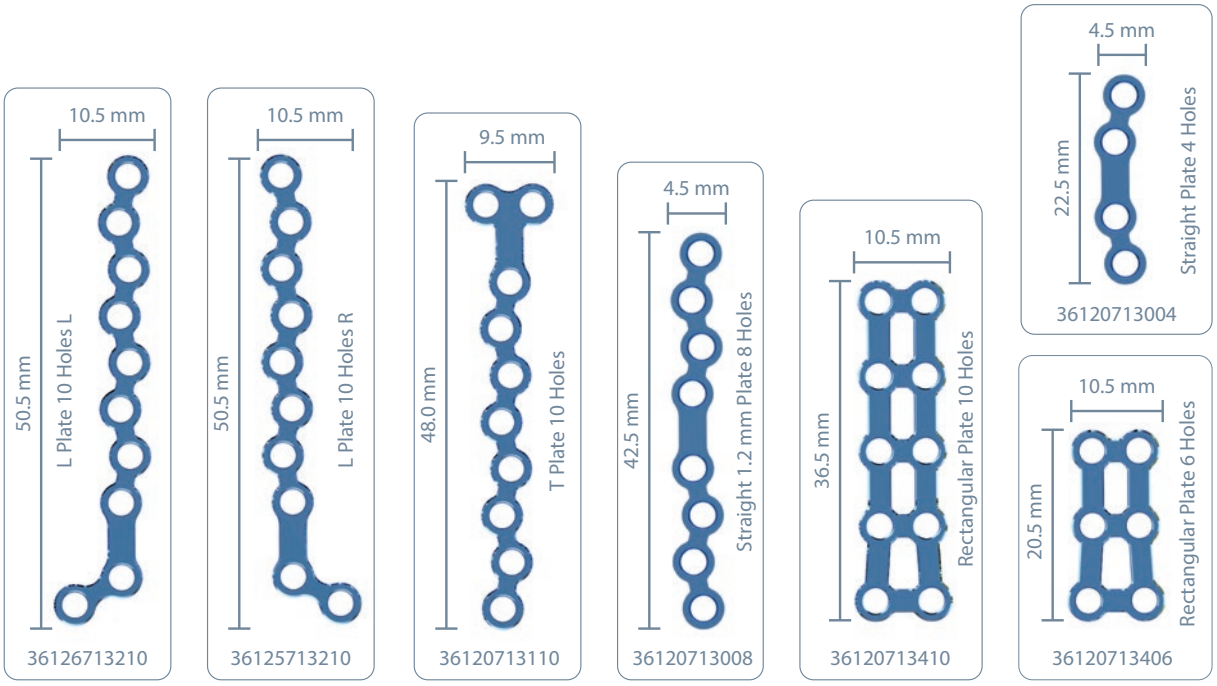

Screws

CORTICAL MINI SCREW Ø 1.5 MM

TST Code	Barcode	Length	Qty
24220040015	8680858434848	4	5
24220050015	8680858434855	5	5
24220060015	8680858434862	6	5
24220070015	8680858434879	7	5
24220080015	8680858434886	8	5
24220090015	8680858434893	9	5
24220100015	8680858434909	10	5
24220110015	8680858434916	11	5
24220120015	8680858434923	12	5
24220130015	8680858434930	13	5
24220140015	8680858434947	14	5
24220150015	8680858434954	15	5
24220160015	8680858434961	16	5
24220170015	8680858434978	17	5
24220180015	8680858434985	18	5
24220190015	8680858434992	19	5
24220200015	8680858435005	20	5
24220210015	8680858435012	21	5
24220220015	8680858435029	22	5
24220230015	8680858435036	23	5
24220240015	8680858435043	24	5

LOCKING MINI SCREW Ø 1.5 MM

TST Code	Barcode	Length	Qty
24227040015	8680858435630	4	5
24227050015	8680858435647	5	5
24227060015	8680858435654	6	5
24227070015	8680858435661	7	5
24227080015	8680858435678	8	5
24227090015	8680858435685	9	5
24227100015	8680858435692	10	5
24227110015	8680858435708	11	5
24227120015	8680858435715	12	5
24227130015	8680858435722	13	5

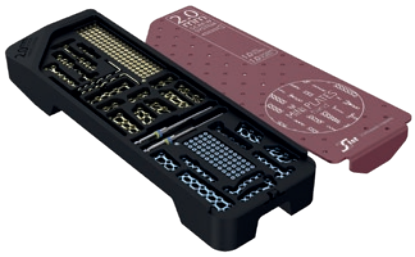

CORTICAL MINI SCREW Ø 2.0 MM

TST Code	Barcode	Length	Qty
24220004020	8680858435173	4	5
24220005020	8680858435180	5	5
24220006020	8680858435197	6	5
24220007020	8680858435203	7	5
24220008020	8680858435210	8	5
24220009020	8680858435227	9	5
24220010020	8680858435234	10	5
24220011020	8680858435241	11	5
24220012020	8680858435258	12	5
24220013020	8680858435265	13	5
24220014020	8680858435272	14	5
24220015020	8680858435289	15	5
24220016020	8680858435296	16	5
24220017020	8680858435302	17	5
24220018020	8680858435319	18	5
24220019020	8680858435326	19	5
24220020020	8680858435333	20	5
24220021020	8680858435340	21	5
24220022020	8680858435357	22	5
24220023020	8680858435364	23	5
24220024020	8680858435371	24	5

LOCKING MINI SCREW Ø 2.0 MM

TST Code	Barcode	Length	Qty
24227060020	8680858435050	6	5
24227070020	8680858435067	7	5
24227080020	8680858435074	8	5
24227090020	8680858435081	9	5
24227100020	8680858435098	10	5
24227110020	8680858435104	11	5
24227120020	8680858435111	12	5
24227130020	8680858435128	13	5
24227140020	8680858435135	14	5
24227160020	8680858435142	16	5
24227180020	8680858435159	18	5
24227200020	8680858435166	20	5

CORTICAL MINI SCREW Ø 2.3 MM

TST Code	Barcode	Length	Qty
24220005023	8680858435388	5	5
24220006023	8680858435395	6	5
24220007023	8680858435401	7	5
24220008023	8680858435418	8	5
24220009023	8680858435425	9	5
24220010023	8680858435432	10	5
24220011023	8680858435449	11	5
24220012023	8680858435456	12	5
24220013023	8680858435463	13	5
24220014023	8680858435470	14	5
24220015023	8680858435487	15	5
24220016023	8680858435494	16	5
24220017023	8680858435500	17	5
24220018023	8680858435517	18	5
24220019023	8680858435524	19	5
24220020023	8680858435531	20	5
24220021023	8680858435548	21	5
24220022023	8680858435555	22	5
24220023023	8680858435562	23	5
24220024023	8680858435579	24	5

LOCKING MINI SCREW Ø 2.0 MM

TST Code	Barcode	Length	Qty
24227060020	8680858435050	6	5
24227070020	8680858435067	7	5
24227080020	8680858435074	8	5
24227090020	8680858435081	9	5
24227100020	8680858435098	10	5
24227110020	8680858435104	11	5
24227120020	8680858435111	12	5
24227130020	8680858435128	13	5
24227140020	8680858435135	14	5
24227160020	8680858435142	16	5
24227180020	8680858435159	18	5
24227200020	8680858435166	20	5

UP-16 Mini Plates Hand 1.5, 2.0, 2.3 mm Set

Instruments

No	TST Code	Barcode	Description	Qty
	00036120608	**8680858438013**	**1.5 MINI PLATES TRAY**	**1**
	2231280012	8680858436873	DRILL 1.2x65MM (1.5 SCREW)	1
	2231265016	8680858436880	DRILL 1.6x65MM (1.5 SCREW GLIDING H)	1
	2121003040	8680858436798	SCREWDRIVER T4 (1.5 SCREW)	2
	00036121010	**8680858438020**	**2.0 MINI PLATES TRAY**	**1**
	02231280016	8680858436897	DRILL 1.6x65MM (2.0 SCREW)	1
	02231265021	8680858436903	DRILL 2.1x65MM (2.0 SCREW GLIDING H)	1
	00036121300	**8680858438037**	**2.0 / 2.3 MINI PLATES TRAY**	**1**
	02231280016	8680858436897	DRILL 1.6x65MM (2.0 SCREW)	2
	02231290019	8680858436910	DRILL 1.9x65MM (2.3 SCREW)	1
	02231265025	8680858436927	DRILL 2.5x65MM (2.3 SCREW GLIDING H)	1
1	**00036121000**	**8680858438587**	**MINI PLATE TRAY FOR INSTRUMENT**	**1**
2	03110000040	8680858436736	MINI PLATE HOLDING FORCEPS	1
3	07080060020	8680858436743	MINI PLATE POSITIONER	1
4	03006100060	8680858436750	MINI PLATE CUTTER	1
5	02121003060	8680858436781	SCREWDRIVER T6 (1.5/2.0 LOC.SCR. 2.0/2.3SCR.)	2
6	02015100015	8699931021547	UNIVERSAL SCREW DRIVER HANDLE	1
7	02005001215	8680858436804	DEPTH GAUGE (1.2/1.5 SCREW)	1
8	02005101520	8680858436828	DRILL GUIDE (1.5/2.0 LOCK SCREW)	1
9	02005101215	8680858436835	DRILL GUIDE (1.5 SCREW)	1
10	02005102023	8680858436842	DRILL GUIDE (2.0 SCREW)	1
11	02005102323	8680858438556	DRILL GUIDE (2.3 SCREW)	1
12	23410080112	8698673441231	KIRSCHNER WIRE TROCAR POINT 1.2X80 MM	4
12	23410045003	8680858405367	OLIVE K-WIRE (THREADED TIP) 1.5X80 MM	4
12	04550129090	8699931032482	K-WIRE TUBE Ø12XØ9X90 MM	2
	00270270080	**8699931009019**	**CONTAINER 270x270x80**	**1**

UP-13
INTERCARPAL FUSION PLATES SET

INTERCARPAL FUSION PLATE Ti

The Mini Intercarpal Fusion Plate is an innovative implant for partial midcarpal arthrodesis of the wrist (Four-Corner-Fusion), for pseudo-arthrosis of the Os Scaphoid and aged SL-band ruptures (SLAC and SNAC wrist). This therapy has established itself as a treatment strategy. The application of it makes a compression between the merged carpal elements, hereby benefits a complete arthrodesis. The Sliding Plate offers the possibility to apply the compression centrally by means of turning the implant through sliding holes which are arranged in a circular way.

Indications: Posttraumatic mediocarpal arthritis following scaphoid non-union (SNAC) or scapholunate ligament rupture (SLAC) and mediocarpal instability (final stage).

Advantages:
Minimal outer diameter in three different sizes. Plate sizes; 15mm, 16mm and 17mm. Slight panel thickness/panel height 2.8mm.
Low profile circular plate with smooth surface and rounded edges to minimize soft tissue irritation.
Kirschner wire holes for temporary fixation and rotatory compression holes.
Fixable with 8 screws. Narrow screw diameter (2.4mm).
Biocompatible titanium alloy. Innovative instrumentation.
Variable screw angle (+/- 8°).

INTERCARPAL FUSION PLATE

TST Code	Barcode	Description	Size	Qty
36020000150	8699931020724	INTERCARPAL FUSION PLATE	Ø15 MM	2
36020000160	8699931020779	INTERCARPAL FUSION PLATE	Ø16 MM	2
36020000170	8699931020731	INTERCARPAL FUSION PLATE	Ø17 MM	2

SMALL HEAD SCREWS Ø 2.4 MM

TST Code	Barcode	Lenght	Qty
24620100024	8699931015218	10 MM	8
24620120024	8699931006728	12 MM	8
24620140024	8699931006735	14 MM	8
24620160024	8699931006742	16 MM	8
24620180024	8699931006759	18 MM	8

Instruments

No	TST Code	Barcode	Description	Qty
1	00000403100	8699931024517	INTERCARPAL FUSION 1.DESIGN TRAY	1
2	00000757025	8699931024654	INTERCARPAL FUSION PLATE & SCREW BOX	1
3	02015100015	8699931021547	UNIVERSAL SCREW DRIVER HANDLE	1
4	02025010170	8698673485648	SCREW DRIVER HEXAGONAL Ø1.7	1
5	03650000015	8699931023855	INTERCARPAL FUSION PLATE REAMER 15 MM	1
6	03650000016	8699931023862	INTERCARPAL FUSION PLATE REAMER 16 MM	1
7	03650000017	8699931023879	INTERCARPAL FUSION PLATE REAMER 17 MM	1
8	03650000915	8699931023893	INTERCARPAL FUSION PLATE REAMER GUIDE 15 MM	1
9	03650000916	8699931023909	INTERCARPAL FUSION PLATE REAMER GUIDE 16 MM	1
10	03650000917	8699931023916	INTERCARPAL FUSION PLATE REAMER GUIDE 17 MM	1
11	03650000010	8699931023848	INTERCARPAL FUSION PLATE HOLDER	1
12	02350000020	8699931023602	BONE DRILL QUICK END Ø2 MM	2
13	02005000500	8698673497023	DEPTH GAUGE (0-50 MM)	1
14	00025502010	8698673448322	MOTOR QUICK ADAPTOR	1
15	04550129090	8699931032482	K-WIRE TUBE Ø12XØ9X90 MM	1
15	23410080115	8699931013429	KIRSCHNER WIRE TROCAR POINT 1.5X80 MM	6
15	23410080112	8698673441231	KIRSCHNER WIRE TROCAR POINT 1.2X80 MM	6
16	04010350070	8699931023923	L-ALLEN WRENCH MINI 3.5X70 MM	1
17	02005100020	8699931019094	DRILL GUIDE 2 MM (HANDLED)	1
18	03650001015	8699931028614	INTERCARPAL FUSION PLATE DRILL GUIDE 15 MM	1
19	03650001016	8699931028621	INTERCARPAL FUSION PLATE DRILL GUIDE 16 MM	1
20	03650001017	8699931028638	INTERCARPAL FUSION PLATE DRILL GUIDE 17 MM	1
	00270270080	8699931009019	CONTAINER 270X270X80 MM	1

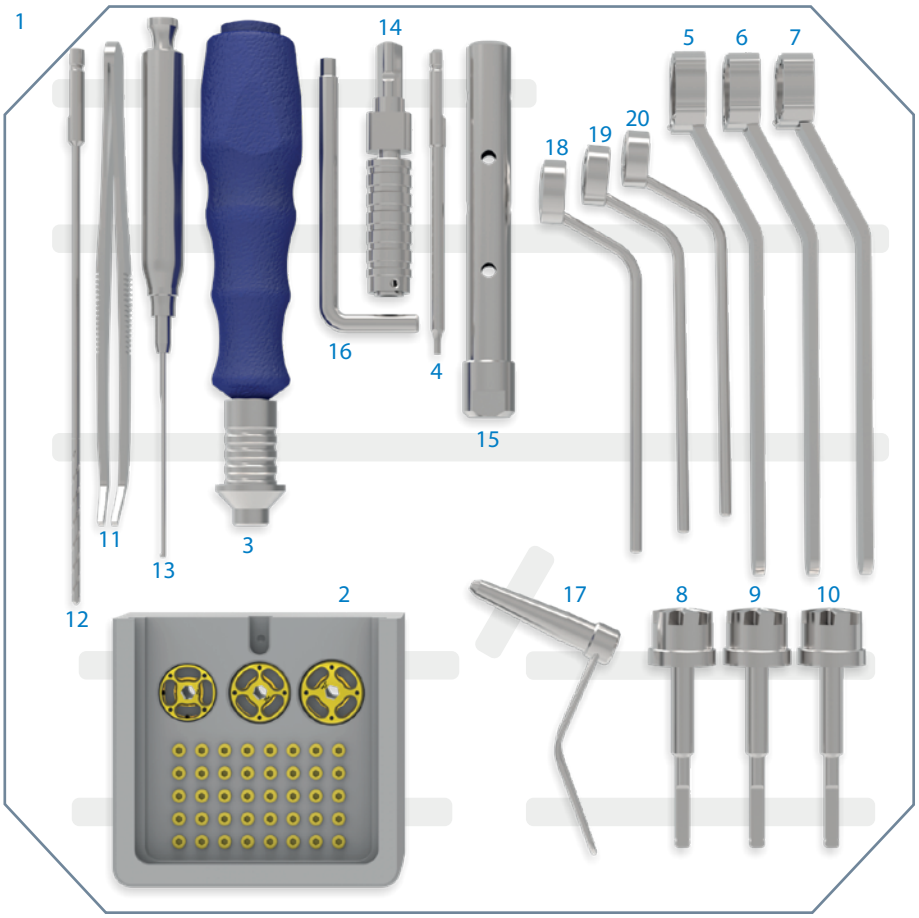

LW-25
PELVIC ACETABULAR PLATES SET

LW-25 Pelvic Acetabular Plates Set

PELVIC ACETABULAR PLATES

Pelvic Acetabular Plate & Screw Set is an internal fixation implant set which provides comprehensive solutions at the fixation of pelvic region fractures. The Plates are compatible with the anatomical structure of the region and the set is consists of different lengths and types of plates, screws and unique instruments that formed preoperatively.

Indications: The fractures of pelvis, acetabulum, sacrum, ilium, symphysis pubis separation, the luxation of the sacroiliac joint and pseudoarthrosis. Nonunion, malunion, revision surgeries, osteotomy, pelvic Arthrodesis, total hip revision surgeries.

Plate Profile: 3.5mm and 4.5mm profile and locking, straight, curved or also J-shaped. Compatible with the contours and curves of all pelvic bones' surfaces. Coaxial reconstructive plates have variety of lengths. The implants which have been specially manufactured with high strength are made of medical stainless steel material (MR Compatible 316 LVM). All Plates can be three-dimensionally contoured allowing them to be closely adapted to pelvic bone surfaces.

TST Code	Barcode	Description
31117135001	8698673475229	Lock. Symphysis Pubis Plate SS. 3.5mm
31117135002	8698673475236	Lock. Symphysis Pubis Plate SS. 3.5mm Long
31117145001	8698673442979	Lock. Symphysis Pubis Plate SS. 4.5mm
31117145002	8698673475243	Lock. Symphysis Pubis Plate SS. 4.5mm Long
31117235004	8698673442986	Lock. Pelvic Recon. Plate SS. 3.5mm 4 Holes
31117235006	8698673442993	Lock. Pelvic Recon. Plate SS. 3.5mm 6 Holes
31117235008	8698673443006	Lock. Pelvic Recon. Plate SS. 3.5mm 8 Holes
31117235010	8698673443013	Lock. Pelvic Recon. Plate SS. 3.5mm 10 Holes
31117235012	8698673443020	Lock. Pelvic Recon. Plate SS. 3.5mm 12 Holes
31117235014	8698673443037	Lock. Pelvic Recon. Plate SS. 3.5mm 14 Holes
31117335004	8698673443044	Lock. Pelvic Curved Recon. Plate SS. 3.5mm 4 Holes
31117335006	8698673443051	Lock. Pelvic Curved Recon. Plate SS. 3.5mm 6 Holes
31117335008	8698673443068	Lock. Pelvic Curved Recon. Plate SS. 3.5mm 8 Holes
31117335010	8698673443075	Lock. Pelvic Curved Recon. Plate SS. 3.5mm 10 Holes
31117335012	8698673443082	Lock. Pelvic Curved Recon. Plate SS. 3.5mm 12 Holes
31117335014	8698673443099	Lock. Pelvic Curved Recon. Plate SS.3.5mm 14 Holes
31117335016	8680858405831	Lock. Pelvic Curved Recon. Plate SS.3.5mm 16 Holes
31115735010	8699931003062	Lock. Pelvic J Recon. Plate SS. Right Ø3.5mm 10 Holes
31115735012	8699931003079	Lock. Pelvic J Recon. Plate SS. Right Ø3.5mm 12 Holes
31116735010	8699931003123	Lock. Pelvic J Recon. Plate SS. Left Ø3.5mm 10 Holes
31116735012	8699931003116	Lock. Pelvic J Recon. Plate SS. Left Ø3.5mm 12 Holes
31117400002	8699931012705	Lock. Hooked Tubular Plate SS. 2 Holes
31117400006	8698673443105	Lock. Hooked Tubular Plate SS. 6 Holes
31117545010	8698673443112	Lock. Pelvic Recon. Plate SS. Ø4.5mm 10 Holes
31117545012	8698673443129	Lock. Pelvic Recon. Plate SS. Ø4.5mm 12 Holes
31117545014	8698673443136	Lock. Pelvic Recon. Plate SS. Ø4.5mm 14 Holes
31117545016	8680858405848	Lock. Pelvic Recon. Plate SS. Ø4.5mm 16 Holes

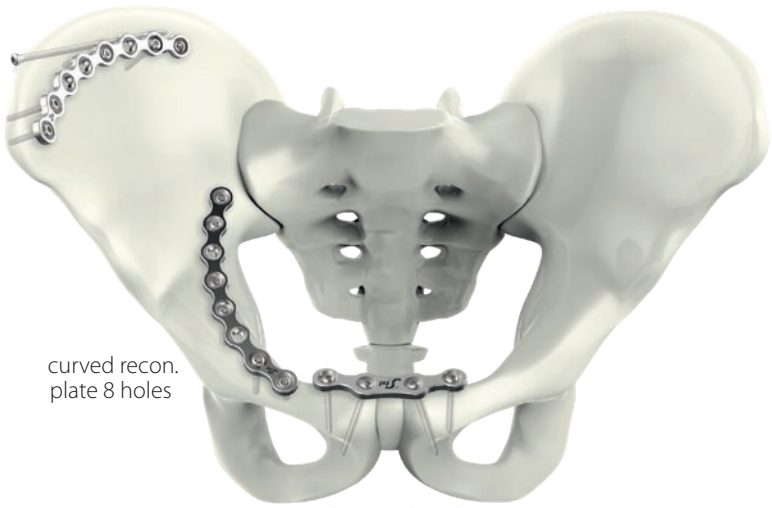

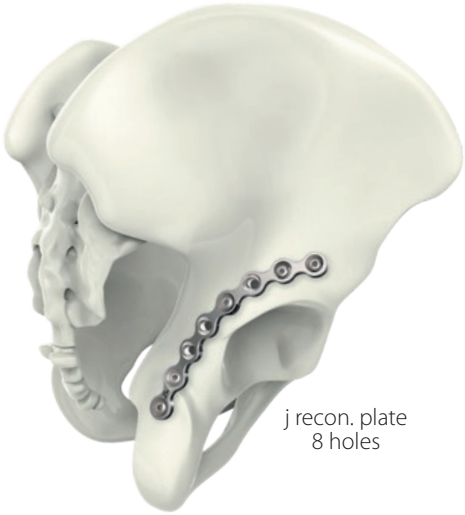

Recommended Screws 3.5 mm Cortical SS, 3.5 mm Lock. Cortical SS, 4.5 mm Cortical SS

LW-25 Pelvic Acetabular Plates Set

ACETABULAR PLATES*

Quadrilateral Surface Plate is designed to buttress the medial wall of the acetabulum. Posterior wall acetabular plate is precontoured distally to match the curvature of the ischial tuberosity.
The proximal end of the plate is left uncontoured with the proximal holes grouped together for optimized bone purchase away from the acetabular joint.

Indications: The fractures of pelvis and acetabulum. Posterior wall fractures, posterior column fractures, transverse and T-type fractures and quadrilateral surface comminution associated with acetabular fracture.

Plate Profile: 2.5mm profile and locking, straight, curved or also shaped. Compatible with the contours and curves of all pelvic bones surfaces.

TST Code	Barcode	Description	Side
31017010014	8698673460171	CURVED RECON.LOCK. PLATE STEEL 3.5 MM 14 HOLES	L
31017010015	8698673460188	CURVED RECON.LOCK. PLATE STEEL 3.5 MM 14 HOLES	R
31316050002	8680858421190	ACETABULAR POSTERIOR WALL PLATE NARROW	L
31315050002	8680858421183	ACETABULAR POSTERIOR WALL PLATE NARROW	R
31216020001	8680858421176	ACETABULAR POSTERIOR WALL PLATE STD.	L
31215020001	8680858421169	ACETABULAR POSTERIOR WALL PLATE STD.	R
31516050002	8680858421237	ISCHIAL EXTENDING ACETABULAR POST. PLATE NARROW	L
31515050002	8680858421220	ISCHIAL EXTENDING ACETABULAR POST. PLATE NARROW	R
31416020002	8680858421213	ISCHIAL EXTENDING ACETABULAR POST. PLATE STD.	L
31415020002	8680858421206	ISCHIAL EXTENDING ACETABULAR POST. PLATE STD.	R

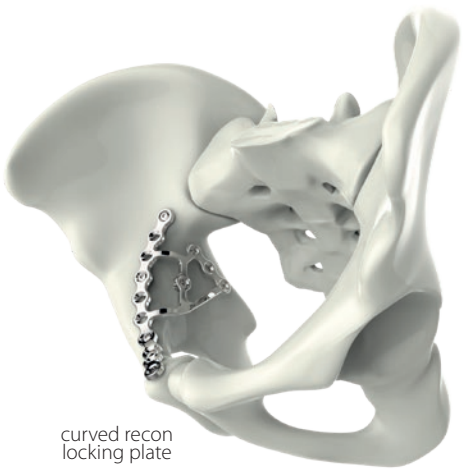

curved recon locking plate

acetabular posterior wall plate

ischial extending acetabular posterior plate

Recommended Screws 3.5 mm Cortical SS, 3.5 mm Lock. Cortical SS

Screws

Having special design and low profile structure, being locking or usual, self-tapping, are in the set.

SPECIAL HEAD CORTICAL SCREW S.STEEL Ø 3.5 MM

TST Code	Barcode	Length	Qty
22810140035	8699931004700	14	5
22810160035	8699931004717	16	5
22810180035	8699931004724	18	5
22810200035	8699931004731	20	5
22810220035	8699931004748	22	5
22810240035	8699931004755	24	5
22810260035	8699931004762	26	5
22810280035	8699931004779	28	5
22810300035	8699931004786	30	5
22810320035	8699931004793	32	5
22810340035	8699931004809	34	5
22810360035	8699931004816	36	5
22810380035	8699931004823	38	5
22810400035	8699931004830	40	5
22810420035	8699931004847	42	5
22810440035	8699931004854	44	5
22810460035	8699931004861	46	5
22810480035	8699931004878	48	5
22810500035	8699931004885	50	5
22810550035	8699931004892	55	5
22810600035	8699931004908	60	5
22810650035	8699931004915	65	5
22810700035	8699931004922	70	5
22810750035	8699931004939	75	5
22810800035	8699931004946	80	5
22810850035	8699931004953	85	5
22810900035	8699931004960	90	5
22810950035	8699931004977	95	5
22810100035	8699931004670	100	5
22810105035	8699931013535	105	5
22810110035	8699931004687	110	5

LOCKING CORTICAL SCREW S.STEEL Ø 3.5 MM

TST Code	Barcode	Length	Qty
20117120035	8699931033656	12	5
20117140035	8699931034035	14	5
20117160035	8699931034042	16	5
20117180035	8699931034059	18	5
20117200035	8699931034066	20	5
20117220035	8699931034080	22	5
20117240035	8699931034097	24	5
20117260035	8699931034103	26	5
20117280035	8699931034110	28	5
20117300035	8699931034387	30	5
20117320035	8699931034394	32	5
20117340035	8699931034400	34	5
20117360035	8699931034417	36	5
20117380035	8699931034424	38	5
20117400035	8699931034431	40	5
20117420035	8699931034448	42	5
20117440035	8699931034455	44	5
20117460035	8699931034462	46	5
20117480035	8699931034479	48	5
20117500035	8699931034561	50	5
20117550035	8699931036374	55	5
20117600035	8699931034615	60	5
20117650035	8699931036343	65	5
20117700035	8699931035797	70	5
20117750035	8699931035827	75	5
20117800035	8699931035865	80	5
20117850035	8699931035872	85	5
20117900035	8699931035889	90	5
20117950035	8699931035896	95	5
20117010035	8699931033625	100	5
20117105035	8699931033632	105	5
20117110035	8699931033649	110	5

CORTICAL SCREW S.STEEL Ø 4.5 MM

TST Code	Barcode	Length	Qty
20210240045	8698673412576	24	3
20210260045	8698673412583	26	3
20210280045	8698673412590	28	3
20210300045	8698673412606	30	3
20210320045	8698673412613	32	3
20210340045	8698673412620	34	3
20210360045	8698673412637	36	3
20210380045	8698673412644	38	3
20210400045	8698673412651	40	3
20210420045	8698673412668	42	3
20210440045	8698673412675	44	3
20210460045	8698673412682	46	3
20210480045	8698673412699	48	3
20210500045	8698673412705	50	3
20210520045	8698673412712	52	3
20210540045	8698673412729	54	3
20210560045	8698673412736	56	3
20210580045	8698673412743	58	3
20210600045	8698673412750	60	3
20210620045	8698673412767	62	3
20210640045	8698673412774	64	3
20210660045	8698673412781	66	3
20210680045	8698673412798	68	3
20210700045	8698673412804	70	3

Plates & Templates

TST Code	Barcode	Description	Qty
00000404500	8699931024722	PELVIS ACETABULUM 5.DESIGN TRAY	1
31117135001	8698673475229	LOCK. SYMPHYSIS PUBIS PLATE SS. 3.5 MM	1
31117135002	8698673475236	LOCK. SYMPHYSIS PUBIS PLATE SS. 3.5 MM LONG	1
31117145001	8698673442979	LOCK. SYMPHYSIS PUBIS PLATE SS. 4.5 MM	1
31117145002	8698673475243	LOCK. SYMPHYSIS PUBIS PLATE SS. 4.5 MM LONG	1
31117235004	8698673442986	LOCK. PELVIC RECON. PLATE SS. 3.5 MM 4 HOLES	1
31117235006	8698673442993	LOCK. PELVIC RECON. PLATE SS. 3.5 MM 6 HOLES	1
31117235008	8698673443006	LOCK. PELVIC RECON. PLATE SS. 3.5 MM 8 HOLES	1
31117235010	8698673443013	LOCK. PELVIC RECON. PLATE SS. 3.5 MM 10 HOLES	1
31117235012	8698673443020	LOCK. PELVIC RECON. PLATE SS. 3.5 MM 12 HOLES	1
31117235014	8698673443037	LOCK. PELVIC RECON. PLATE SS. 3.5 MM 14 HOLES	1
31117335004	8698673443044	LOCK. PELVIC CURVED RECON.PLATE SS. 3.5MM 4 HOLES	1
31117335006	8698673443051	LOCK. PELVIC CURVED RECON.PLATE SS. 3.5MM 6 HOLES	1
31117335008	8698673443068	LOCK. PELVIC CURVED RECON.PLATE SS. 3.5MM 8 HOLES	1
31117335010	8698673443075	LOCK. PELVIC CURVED RECON.PLATE SS. 3.5MM 10 HOLES	1
31117335012	8698673443082	LOCK. PELVIC CURVED RECON.PLATE SS. 3.5MM 12 HOLES	1
31117335014	8698673443099	LOCK. PELVIC CURVED RECON.PLATE SS. 3.5MM 14 HOLES	1
31117335016	8680858405831	LOCK. PELVIC CURVED RECON.PLATE SS. 3.5MM 16 HOLES	1
31117400002	8699931012705	LOCK. HOOKED TUBULAR PLATE SS. 2 HOLES	1
31117400006	8698673443105	LOCK. HOOKED TUBULAR PLATE SS. 6 HOLES	1
31117545010	8698673443112	LOCK. PELVIC RECON. PLATE SS. 4.5 MM 10 HOLES	1
31117545012	8698673443129	LOCK. PELVIC RECON. PLATE SS. 4.5 MM 12 HOLES	1
31117545014	8698673443136	LOCK. PELVIC RECON. PLATE SS. 4.5 MM 14 HOLES	1
31117545016	8680858405848	LOCK. PELVIC RECON. PLATE SS. 4.5 MM 16 HOLES	1
31115735010	8699931003062	LOCK. PELVIC J RECON.PLATE SS. RIGHT 3.5 MM 10 HOLES	1
31115735012	8699931003079	LOCK. PELVIC J RECON.PLATE SS. RIGHT 3.5 MM 12 HOLES	1
31116735010	8699931003123	LOCK. PELVIC J RECON.PLATE SS. LEFT 3.5 MM 10 HOLES	1
31116735012	8699931003116	LOCK. PELVIC J RECON.PLATE SS. LEFT 3.5 MM 12 HOLES	1
01147235004	8699931007688	LOCK.PELVIC RECON. PLATE TEMPLATE 3.5 MM 4 HOLES	1
01147235006	8699931007022	LOCK.PELVIC RECON. PLATE TEMPLATE 3.5 MM 6 HOLES	1
01147235008	8699931007039	LOCK.PELVIC RECON. PLATE TEMPLATE 3.5 MM 8 HOLES	1
01147235010	8699931028096	LOCK.PELVIC RECON. PLATE TEMPLATE 3.5 MM 10 HOLES	1
01147235012	8699931007053	LOCK.PELVIC RECON. PLATE TEMPLATE 3.5 MM 12 HOLES	1
01147235014	8699931007060	LOCK.PELVIC RECON. PLATE TEMPLATE 3.5 MM 14 HOLES	1
01147335004	8699931007046	LOCK.PELVIC CURVED RECON.PLATE TEMPLATE 3.5 MM 4 H	1
01147335006	8699931007077	LOCK.PELVIC CURVED RECON.PLATE TEMPLATE 3.5 MM 6 H	1
01147335008	8699931007084	LOCK.PELVIC CURVED RECON.PLATE TEMPLATE 3.5 MM 8 H	1
01147335010	8699931007091	LOCK.PELVIC CURVED RECON.PLATE TEMPLATE 3.5MM 10 H	1
01147335012	8699931007107	LOCK.PELVIC CURVED RECON.PLATE TEMPLATE 3.5MM 12 H	1
01147335014	8699931007114	LOCK.PELVIC CURVED RECON.PLATE TEMPLATE 3.5MM 14 H	1
01147335016	8680858423057	LOCK.PELVIC CURVED RECON.PLATE TEMPLATE 3.5MM 16 H	1
01147545010	8699931007121	LOCK.PELVIC RECON. PLATE TEMPLATE 4.5 MM 10 HOLES	1
01147545012	8699931007138	LOCK.PELVIC RECON. PLATE TEMPLATE 4.5 MM 12 HOLES	1
01147545014	8699931007145	LOCK.PELVIC RECON. PLATE TEMPLATE 4.5 MM 14 HOLES	1
01147545016	8680858422951	LOCK.PELVIC RECON. PLATE TEMPLATE 4.5 MM 16 HOLES	1
01145735010	8699931007152	LOCK.PELVIC J RECON.PLATE TEMPLATE R-L 3.5MM 10 H	1
01145735012	8699931007169	LOCK.PELVIC J RECON.PLATE TEMPLATE R-L 3.5MM 12 H	1

Instruments

No	TST Code	Barcode	Description	Qty
1	00000404100	8699931024685	PELVIS ACETABULUM 1.DESIGN TRAY	1
2	03110000028	8699931022025	QUICK SCHANZ CORTICAL FOR REDUCTION Ø 5X150 MM	1
3	03110000029	8699931021929	QUICK SCHANZ CORTICAL FOR REDUCTION Ø 6X180 MM	1
4	01193000023	8698673493780	T QUICK HANDLE	1
5	03110000004	8698673464070	PELVIC REDUCTION FORCEPS ASYMMETRIC TIP	1
6	03110001905	8699931011043	PELVIC REDUCTION FORCEPS ANGLED SMALL 190 MM	1
7	03110000001	8698673464049	PELVIC BONE HOOK T HANDLE	1
8	03110000002	8698673464056	PELVIC REDUCTION FORCEPS 2 POINTED TIP	1
9	00000404200	8699931024692	PELVIS ACETABULUM 2.DESIGN TRAY	1
10	23410250120	8698673453128	KIRSCHNER WIRE TROCAR POINT 2X250 MM	5
10	04551000260	8699931030693	K-WIRE TUBE Ø10XØ8X260 MM	1
11	03110000006	8698673464094	PELVIC REDUCTION FORCEPS W POINT 250 MM	1
12	03110000007	8698673464100	PELVIC FARABEUF FORCEPS	1
13	03110000008	8698673464117	PELVIC REDUCTION FORCEPS WITH SCREW	1
14	03110000011	8698673464148	PELVIC PLIERS	1
15	00000404300	8699931024708	PELVIS ACETABULUM 3.DESIGN TRAY	1
16	03110000003	8698673464063	PELVIC REDUCTION FORCEPS 3 POINTED TIP	1
17	03910000001	8699931029239	PELVIC SCIATIC NERVE RETRACTOR	1
18	03110002305	8699931011050	PELVIC REDUCTION FORCEPS ANGLED LARGE 230 MM	1
19	03060000012	8698673493216	PERIOSTEAL ELEVATOR 12 MM	1
20	03110000014	8699931028577	HOHMANN RETRACTOR SMALL	1
21	03110000015	8698673464186	HOHMANN RETRACTOR MEDIUM	1
22	03110000016	8698673464193	HOHMANN RETRACTOR LARGE	1
23	00000404400	8699931024715	PELVIS ACETABULUM 4.DESIGN TRAY	1
24	02005700027	8698673495074	LOCK. DRILL GUIDE Ø 2.7X50 MM	1
25	08061008027	8698673495067	LOCK. DRILL GUIDE Ø 2.7X80 MM	1
26	02057012027	8680858405664	LOCK. DRILL GUIDE Ø 2.7X120 MM	1
27	03114000100	8699931023763	DEPTH GAUGE - PELVIS & ACETAB. PLATE	1
28	03110002735	8699931023749	PELVIC DOUBLE DRILL SLEEVE Ø 2.7- Ø 3.5	1
29	03110003245	8699931021936	PELVIC DOUBLE DRILL SLEEVE 3.2-4.5	1
30	03110000020	8698673486676	PELVIC STRAIGHT PUSHER (POINT BALL TIP)	2
31	03110000009	8680858442386	PELVIC ANGLED PUSHER (POINT BALL TIP)	1
32	03110000019	8698673486645	PELVIC DISC (FOR BALL TIP)	4
33	03110000010	8698673464131	PELVIC BENDINGS	2
34	01192000013	8698673495371	FLEXIBLE DRILL HOLDER	1
35	03110030270	8699931021943	QUICK DRILL Ø 2.7X30 MM	1
36	03110050270	8699931021950	QUICK DRILL Ø 2.7X50 MM	1
37	03110250050	8699931023756	SCREW DRIVER QUICK Ø2.5X50 MM	1
38	00223127200	8699931023114	QUICK DRILL Ø 2.7X200 MM	1
39	22360022027	8680858405800	BONE DRILL 2.7X15X220 MM	1
40	00223132150	8699931021806	QUICK DRILL Ø 3.2X150 MM	2
41	22310130035	8698673450462	BONE DRILL 3.5X130 MM	1
42	00223145130	8698673448292	QUICK DRILL Ø 4.5X130 MM	1
43	02900250130	8699931026719	SCREW DRIVER QUICK TIP HOLDER Ø2.5X130 MM	1
44	02020200025	8699931023435	SCREW DRIVER QUICK TIP Ø 2.5X 200 MM	1
45	02900000035	8699931024784	SCREW DRIVER Ø 3.5 MM QUICK TIP HOLDER	1
46	02020220035	8699931023442	SCREW DRIVER QUICK HEX. TIP Ø 3.5X 220 MM	1
47	02010101002	8698673493308	SOFT SCREW DRIVER QUICK LARGE	1
48	00000404600	8680858442379	PELVIS ACETABULUM 6.DESIGN TRAY	1
49	03110000012	8680858442393	PELVIC REDUCTION FORCEPS ASYMMETRIC TIP LARGE	1
50	03110000013	8680858442409	PELVIC REDUCTION FORCEPS 2 POINTED TIP LARGE	1
51	03110000017	8680858442416	PELVIC REDUCTION FORCEPS ANGLED X-LARGE	1
	00000401300	8699931024678	PELVIC ACETABULUM SCREW BOX	1
	00560270125	8699931010923	CONTAINER 560X270X125 MM	1
	00560270150	8699931010275	CONTAINER 560X270X150 MM	1

Instruments

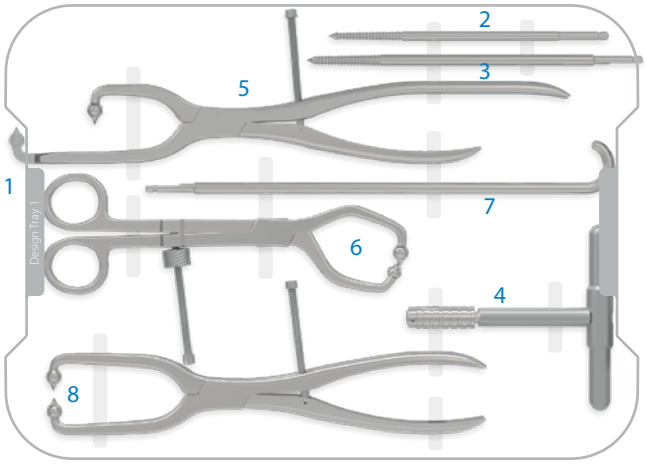

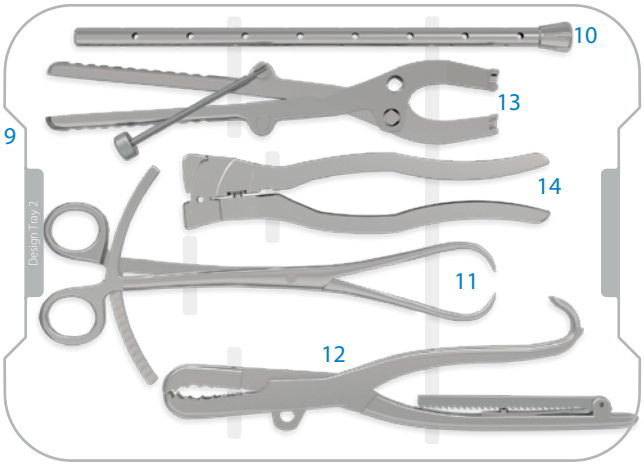

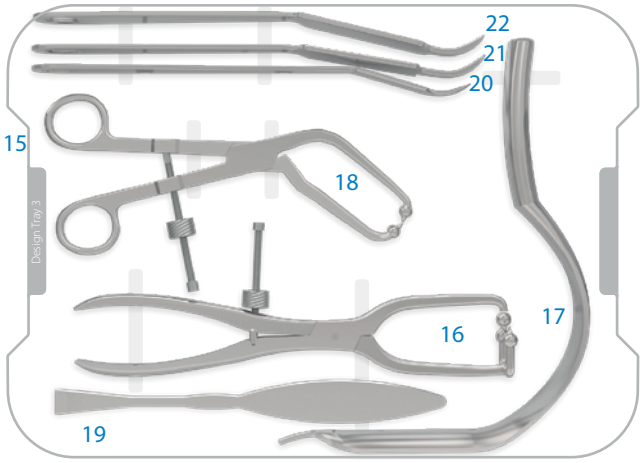

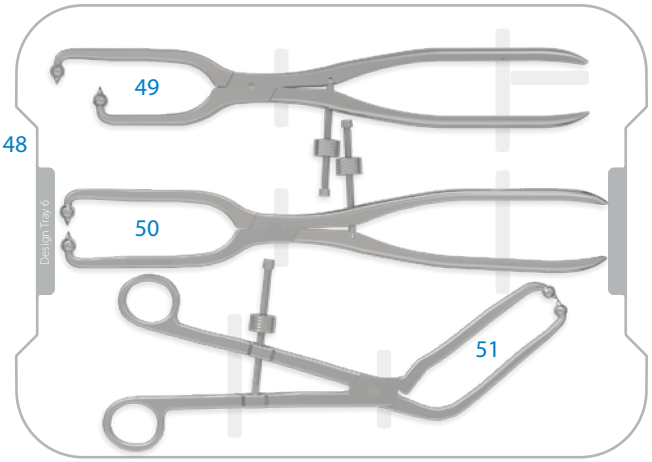

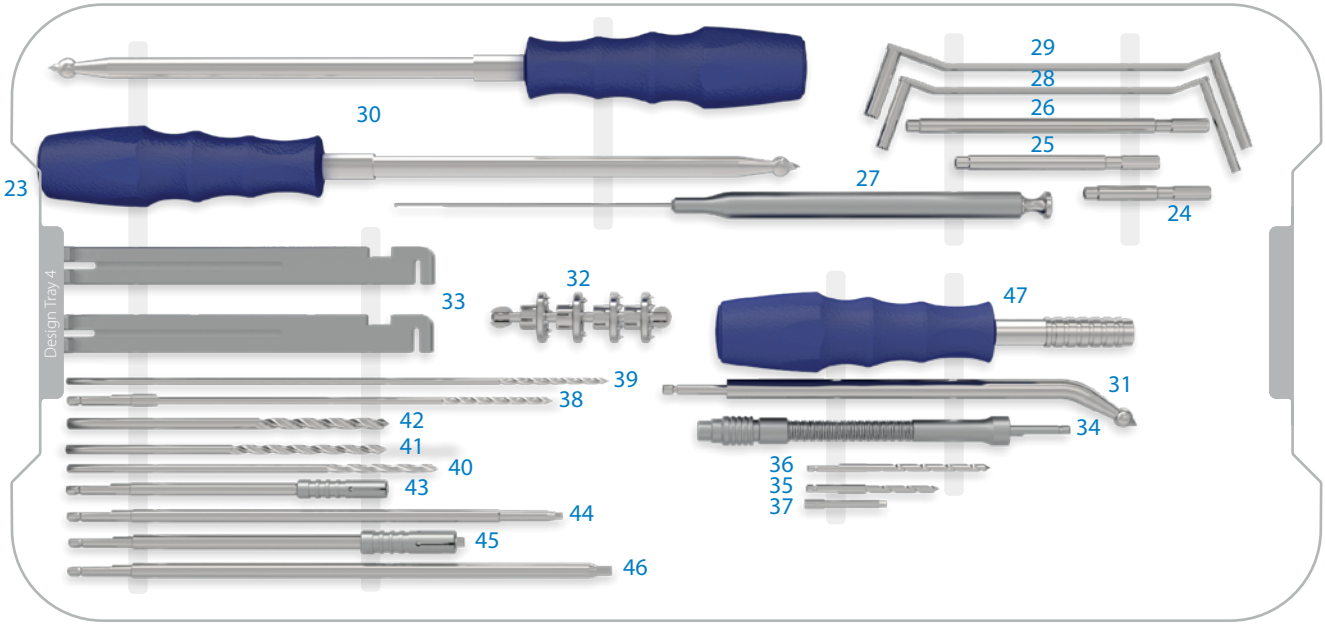

LW-01 SS
LW-02 Ti
CABLE PLATES SET

LW-01 SS / LW-02 Ti Cable Plates Sets

CABLE PLATES

Indications: Hip and acetabular fractures, Prophylactic banding in total joint replacements and reattachment of the greater trochanter following osteotomy in total hip arthroplasty or fractures.

Stainless steel plates can be used with stainless steel (CrNi) cables. Titanium plates can be used with both CrNi and CoCrMo cables.

	TST Code	Barcode	Description	Side	Material	Length (mm)
LW-01 SS	36810003001	8699931027730	PROX. FEMUR LOCK. HOOK PLATE SMALL	-	S.STEEL	45
	36810002002	8699931027747	PROX. FEMUR LOCK. HOOK PLATE MEDIUM	-	S.STEEL	60
	36810000130	8699931027754	PROX. FEMUR LOCK. HOOK PLATE 3 HOLES	-	S.STEEL	130
	36815000180	8699931027761	PROX. FEMUR LOCK. HOOK PLATE 5 HOLES	R	S.STEEL	180
	36815000255	8699931027778	PROX. FEMUR LOCK. HOOK PLATE 8 HOLES	R	S.STEEL	255
	36816000180	8699931027792	PROX. FEMUR LOCK. HOOK PLATE 5 HOLES	L	S.STEEL	180
	36816000255	8699931027808	PROX. FEMUR LOCK. HOOK PLATE 8 HOLES	L	S.STEEL	255
	36817000040	8699931028218	DIAPHYSEAL LOCK. CABLE PLATE 4 HOLES	-	S.STEEL	137
	36817000060	8699931028225	DIAPHYSEAL LOCK. CABLE PLATE 6 HOLES	-	S.STEEL	187
	36817000080	8699931028232	DIAPHYSEAL LOCK. CABLE PLATE 8 HOLES	-	S.STEEL	237
	36817000100	8699931028249	DIAPHYSEAL LOCK. CABLE PLATE 10 HOLES	-	S.STEEL	287
	26810000075	8699931027839	CABLE CLAMP SCREW		S.STEEL	
	36810000004	8699931027822	CABLE CLAMP		S.STEEL	
	30110000002	8680858420636	CABLE+SWAGE		CrNi	760
LW-02 Ti	36820003001	8699931027655	PROX. FEMUR LOCK. HOOK PLATE SMALL	-	Ti	45
	36820002002	8699931027662	PROX. FEMUR LOCK. HOOK PLATE MEDIUM	-	Ti	60
	36820000130	8699931027679	PROX. FEMUR LOCK. HOOK PLATE 3 HOLES	-	Ti	130
	36825000180	8699931027686	PROX. FEMUR LOCK. HOOK PLATE 5 HOLES	R	Ti	180
	36825000255	8699931027693	PROX. FEMUR LOCK. HOOK PLATE 8 HOLES	R	Ti	255
	36826000180	8699931027716	PROX. FEMUR LOCK. HOOK PLATE 5 HOLES	L	Ti	180
	36826000255	8699931027723	PROX. FEMUR LOCK. HOOK PLATE 8 HOLES	L	Ti	255
	36827000040	8699931028256	DIAPHYSEAL LOCK. CABLE PLATE 4 HOLES	-	Ti	137
	36827000060	8699931028263	DIAPHYSEAL LOCK. CABLE PLATE 6 HOLES	-	Ti	187
	36827000080	8699931028270	DIAPHYSEAL LOCK. CABLE PLATE 8 HOLES	-	Ti	237
	36827000100	8699931028287	DIAPHYSEAL LOCK. CABLE PLATE 10 HOLES	-	Ti	287
	26820000075	8699931028102	CABLE CLAMP SCREW		Ti	
	36820000004	8699931028058	CABLE CLAMP		Ti	
	30110000002	8680858420636	CABLE+SWAGE		CrNi	760
	30110000004	8680858420643	CABLE+SWAGE		CoCrMo	760*

*opsiyonel

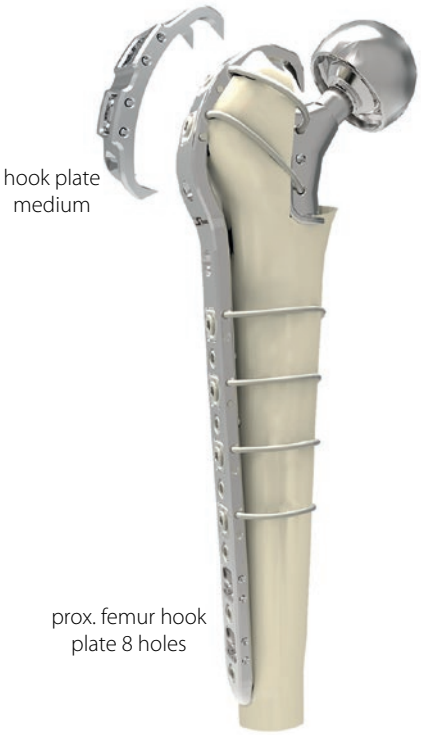

Recommended Screws for LW-01 5.0 mm Cortical S. Steel, 5.0 mm Lock. Cortical S. Steel, 5.5 mm Cancellous S. Steel, 5.5 mm Lock. Cancellous S. Steel
Recommended Screws for LW-02 5.0 mm Cortical, 5.0 mm Lock. Cortical, 5.5 mm Cancellous, 5.5 mm Lock. Cancellous

Screws

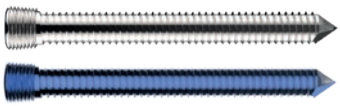

LOCK CORTEX SCREW CONICAL HEAD SELFT Ø 5 MM

Stainless Steel		Titanium			
TST Code	Barcode	TST Code	Barcode	Length	Qty
20117120050	8698673461567	20127120050	8698673476394	12	3
20117140050	8698673461574	20127140050	8698673445185	14	3
20117160050	8698673446472	20127160050	8698673429598	16	3
20117180050	8698673446489	20127180050	8698673429604	18	3
20117200050	8698673446496	20127200050	8698673429611	20	3
20117220050	8698673446502	20127220050	8698673429628	22	3
20117240050	8698673446519	20127240050	8698673429635	24	3
20117260050	8698673446526	20127260050	8698673429642	26	3
20117280050	8698673446533	20127280050	8698673429659	28	3
20117300050	8698673446540	20127300050	8698673429666	30	3
20117320050	8698673446557	20127320050	8698673429673	32	3
20117340050	8698673446564	20127340050	8698673429680	34	3
20117360050	8698673446571	20127360050	8698673429697	36	3
20117380050	8698673446588	20127380050	8698673429703	38	3
20117400050	8698673446595	20127400050	8698673429710	40	3
20117420050	8698673461581	20127420050	8698673445192	42	3
20117440050	8698673461598	20127440050	8698673445208	44	3
20117460050	8698673461604	20127146050	8698673445925	46	3
20117480050	8698673461611	20127148050	8698673445215	48	3
20117500050	8698673446618	20127500050	8698673429734	50	3

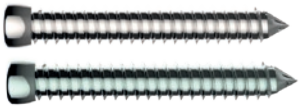

CORTEX SCREW CONICAL HEAD SELFT Ø 5.0 MM

Stainless Steel		Titanium			
TST Code	Barcode	TST Code	Barcode	Length	Qty
20110120050	8698673481497	20120120050	8698673481480	12	3
20110140050	8698673461796	20120140050	8698673475939	14	3
20110160050	8698673446700	20120160050	8698673429369	16	3
20110180050	8698673446717	20120180050	8698673429376	18	3
20110200050	8698673446724	20120200050	8698673429383	20	3
20110220050	8698673446731	20120220050	8698673429390	22	3
20110240050	8698673446748	20120240050	8698673429406	24	3
20110260050	8698673446755	20120260050	8698673429413	26	3
20110280050	8698673446762	20120280050	8698673429420	28	3
20110300050	8698673446779	20120300050	8698673429437	30	3
20110320050	8698673446786	20120320050	8698673429444	32	3
20110340050	8698673446793	20120340050	8698673429451	34	3
20110360050	8698673446809	20120360050	8698673429468	36	3
20110380050	8698673446816	20120380050	8698673429475	38	3
20110400050	8698673446823	20120400050	8698673429482	40	3
20110420050	8698673480643	20120420050	8698673480605	42	3
20110440050	8698673480650	20120440050	8698673480612	44	3
20110460050	8698673480667	20120460050	8698673480629	46	3
20110480050	8698673480674	20120480050	8698673480636	48	3
20110500050	8698673446847	20120500050	8698673429505	50	3

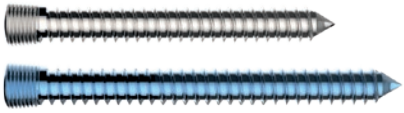

LOCK CORTICO CANCEL CONICAL HEAD SELFT Ø 5.5 MM

Stainless Steel		Titanium			
TST Code	Barcode	TST Code	Barcode	Length	Qty
20117500055	8698673446199	20127500055	8698673438194	50	3
20117550055	8698673446205	20127550055	8698673438200	55	3
20117600055	8698673446212	20127600055	8698673438217	60	3
20117650055	8698673446229	20127650055	8698673438224	65	3
20117700055	8698673446236	20127700055	8698673438231	70	3
20117750055	8698673446243	20127750055	8698673438248	75	3
20117800055	8698673446250	20127800055	8698673438255	80	3
20117850055	8698673446267	20127850055	8698673438262	85	3
20117900055	8698673446274	20127900055	8698673438279	90	3
20117950055	8698673446281	20127950055	8698673438286	95	3
20117100055	8698673446298	20127100055	8698673438149	100	3
20117105055	8698673446304	20127105055	8698673438156	105	3
20117110055	8698673446311	20127110055	8698673438163	110	3

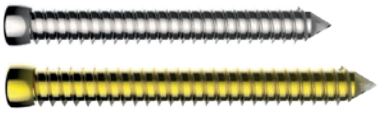

CORTICO CANCELLOUS CONICAL HEAD SELFT Ø 5.5 MM

Stainless Steel		Titanium			
TST Code	Barcode	TST Code	Barcode	Length	Qty
20110500055	8698673446342	20120500055	8698673437883	50	2
20110550055	8698673446359	20120550055	8698673437890	55	2
20110600055	8698673446366	20120600055	8698673437906	60	2
20110650055	8698673446373	20120650055	8698673437913	65	2
20110700055	8698673446380	20120700055	8698673437920	70	2
20110750055	8698673446397	20120750055	8698673437937	75	2
20110800055	8698673446403	20120800055	8698673437944	80	2
20110850055	8698673446410	20120850055	8698673437951	85	2
20110900055	8698673446427	20120900055	8698673437968	90	2
20110950055	8698673446434	20120950055	8698673437975	95	2
20110100055	8698673446441	20120100055	8698673437982	100	2
20110105055	8698673446458	20120105055	8698673437999	105	2
20110110055	8698673446465	20120110055	8698673438002	110	2

Plates & Instruments

	No	TST Code	Barcode	Description	Quantity
LW-01 SS		00000804100	8699931026023	CABLE GRIP 1. DESIGN TRAY	1
		36810003001	8699931027730	PROX. FEMUR LOCK. HOOK PLATE S.S. SMALL	1
		36810002002	8699931027747	PROX. FEMUR LOCK. HOOK PLATE S.S. MEDIUM	1
		36810000130	8699931027754	PROX. FEMUR LOCK. HOOK PLATE S.S. 130 MM (3 HOLES)	1
		36815000180	8699931027761	PROX. FEMUR LOCK. HOOK PLATE S.S. R 180MM(5 HOLES)	1
		36815000255	8699931027778	PROX. FEMUR LOCK. HOOK PLATE S.S. R 255MM(8 HOLES)	1
		36816000180	8699931027792	PROX. FEMUR LOCK. HOOK PLATE S.S. L 180MM(5 HOLES)	1
		36816000255	8699931027808	PROX. FEMUR LOCK. HOOK PLATE S.S. L 255MM(8 HOLES)	1
		36817000040	8699931028218	DIAPHYSEAL LOCK. CABLE PLATE S.S. 4 HOLES	1
		36817000060	8699931028225	DIAPHYSEAL LOCK. CABLE PLATE S.S. 6 HOLES	1
		36817000080	8699931028232	DIAPHYSEAL LOCK. CABLE PLATE S.S. 8 HOLES	1
		36817000100	8699931028249	DIAPHYSEAL LOCK. CABLE PLATE S.S. 10 HOLES	1
		26810000075	8699931027839	CABLE CLAMP SCREW	30
		36810000004	8699931027822	CABLE CLAMP	30
		30110000002	8680858420636	2.0 MM CABLE+SWAGE CRNI	5
LW-02 Ti		00000804100	8699931026023	CABLE GRIP 1. DESIGN TRAY	1
		36820003001	8699931027655	PROX. FEMUR LOCK. HOOK PLATE SMALL	1
		36820002002	8699931027662	PROX. FEMUR LOCK. HOOK PLATE MEDIUM	1
		36820000130	8699931027679	PROX. FEMUR LOCK. HOOK PLATE 3 HOLES	1
		36825000180	8699931027686	PROX. FEMUR LOCK. HOOK PLATE 5 HOLES	1
		36825000255	8699931027693	PROX. FEMUR LOCK. HOOK PLATE 8 HOLES	1
		36826000180	8699931027716	PROX. FEMUR LOCK. HOOK PLATE 5 HOLES	1
		36826000255	8699931027723	PROX. FEMUR LOCK. HOOK PLATE 8 HOLES	1
		36827000040	8699931028256	DIAPHYSEAL LOCK. CABLE PLATE 4 HOLES	1
		36827000060	8699931028263	DIAPHYSEAL LOCK. CABLE PLATE 6 HOLES	1
		36827000080	8699931028270	DIAPHYSEAL LOCK. CABLE PLATE 8 HOLES	1
		36827000100	8699931028287	DIAPHYSEAL LOCK. CABLE PLATE 10 HOLES	1
		26820000075	8699931028102	CABLE CLAMP SCREW	30
		36820000004	8699931028058	CABLE CLAMP	30
		30110000002	8680858420636	2.0 MM CABLE+SWAGE CRNI	5
	1	00000804200	8699931026030	CABLE GRIP 2. DESIGN TRAY	1
	2	03006100050	8698673496392	CABLE CUTTER	1
	3	03006100020	8698673495418	FEMORAL CABLE PASSER	1
	4	03006100030	8699931023626	LARGE CABLE PASSER	1
	5	02010101002	8698673493308	SOFT SCREW DRIVER QUICK LARGE	1
	6	02020101035	8698673493322	SCREW DRIVER QUICK Ø 3.5 MM	1
	7	02231030042	8698673484795	BONE DRILL 4.2X60X300 MM	2
	7	23410250120	8698673453128	KIRSCHNER WIRE TROCAR POINT 2X250 MM	4
	7	04550129310	8680858424801	K-WIRE TUBE Ø12XØ9X310 MM	1
	8	02005000100	8698673497047	DEPTH GAUGE - LOWER EXTREMITY PLATE	1
	9	03501000042	8699931011005	CONIC THR.DRILL SLEEVE 4.2MM	1
	10	08050000042	8699931026733	DRILL GUIDE Ø 4.2 MM	1
	11	00000804300	8699931026047	CABLE GRIP 3. DESIGN TRAY	1
	12	03006100040	8698673496934	CRIMP TOOL	1
	13	03006100010	8698673496415	CABLE TENSIONER	1
	14	00000804400	8699931028119	CABLE GRIP 4. DESIGN TRAY	1
	15	08050000080	8699931027907	TROCHANTERIC GRIP POSITIONER	1
	16	08060000005	8699931027914	TROCHANTERIC GRIP IMPACTOR	1
	17	01193002009	8699931028126	BONE HAMMER - MEDIUM	1
		00000810100	8699931026054	CABLE GRIP SCREW TRAY	1
		00560270125	8699931010923	CONTAINER 560X270X125 MM	1

Instruments

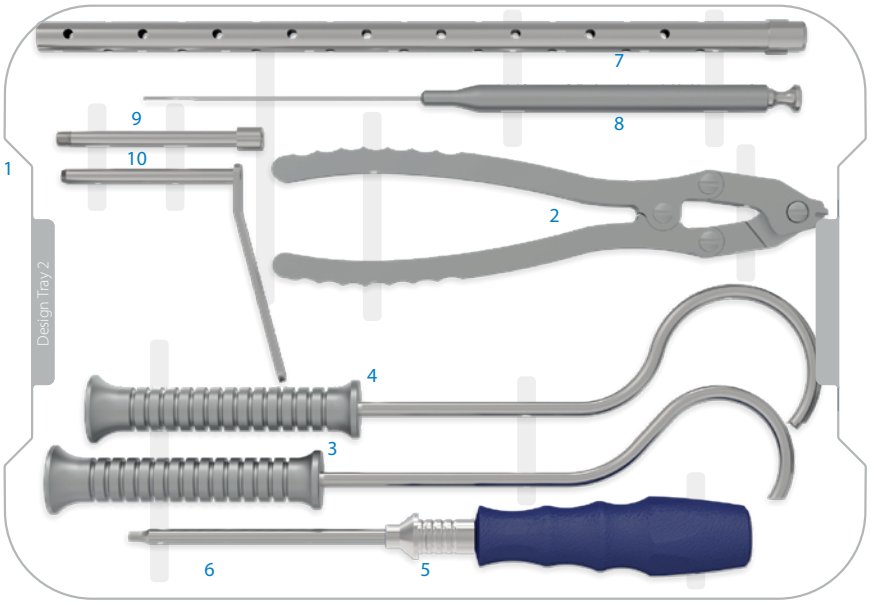

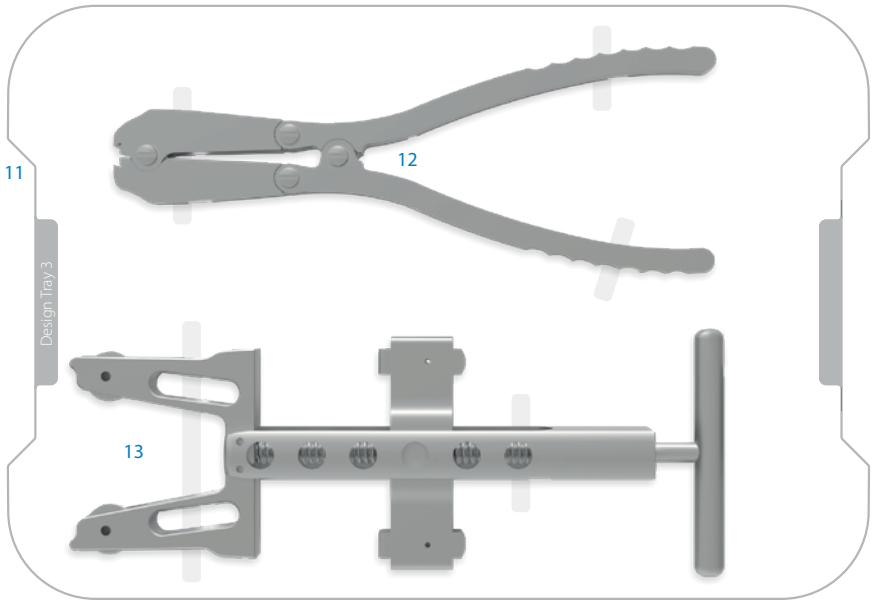

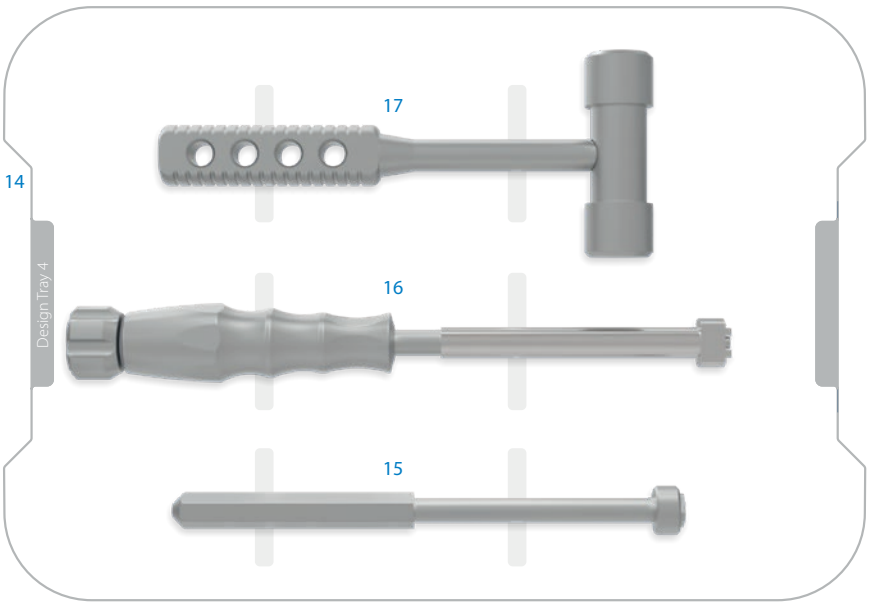

LW-04 Ti
LW-05 SS
DHS/DCS PLATES SET

DYNAMIC HIP SCREW (DHS) PLATES

Indications: Intertrochanteric fractures.

Plate Profile: Thickness: 8.0 mm, Width: 19.0 mm, Distance between holes: 16.0 mm

	TST Code	Barcode	Description	Material	Length (mm)
LW-04 Ti	33222350003	8698673427648	LC DYNAMIC HIP SCREW PLATE DHS LOCK 135° 3HOLES	Ti	80
	33222350004	8698673427655	LC DYNAMIC HIP SCREW PLATE DHS LOCK 135° 4HOLES	Ti	96
	33222350005	8698673427662	LC DYNAMIC HIP SCREW PLATE DHS LOCK 135° 5HOLES	Ti	11
	33222350006	8698673427679	LC DYNAMIC HIP SCREW PLATE DHS LOCK 135° 6HOLES	Ti	134
	33222350007	8698673427686	LC DYNAMIC HIP SCREW PLATE DHS LOCK 135° 7HOLES	Ti	150
	33222350008	8698673427693	LC DYNAMIC HIP SCREW PLATE DHS LOCK 135° 8HOLES	Ti	166
	33222350010	8698673427716	LC DYNAMIC HIP SCREW PLATE DHS LOCK 135° 10HOLES	Ti	198
	33222350012	8698673427723	LC DYNAMIC HIP SCREW PLATE DHS LOCK 135° 12HOLES	Ti	230
	33222350014	8698673427730	LC DYNAMIC HIP SCREW PLATE DHS LOCK 135° 14HOLES	Ti	256
LW-05 SS	33212350003	8698673414297	DHS PLATE 135° 3 HOLES	S.STEEL	66
	33212350004	8698673414303	DHS PLATE 135° 4 HOLES	S.STEEL	82
	33212350005	8698673414310	DHS PLATE 135° 5 HOLES	S.STEEL	98
	33212350006	8698673414327	DHS PLATE 135° 6 HOLES	S.STEEL	114
	33212350007	8698673414334	DHS PLATE 135° 7 HOLES	S.STEEL	130
	33212350008	8698673414341	DHS PLATE 135° 8 HOLES	S.STEEL	146
	33212350010	8698673414211	DHS PLATE 135° 10 HOLES	S.STEEL	178
	33212350012	8698673414235	DHS PLATE 135° 12 HOLES	S.STEEL	210
	33212350014	8698673414259	DHS PLATE 135° 14 HOLES	S.STEEL	242

DHS & DCS LAG SCREW

Titanium		Stainless Steel			
TST Code	Barcode	TST Code	Barcode	Length	Qty
20720500000	8698673427945	20710500000	8698673414402	50 mm	1
20720550000	8698673427952	20710550000	8698673414419	55 mm	1
20720600000	8698673427525	20710600000	8698673414426	60 mm	1
20720650000	8698673427532	20710650000	8698673414433	65 mm	1
20720700000	8698673427570	20710700000	8698673414440	70 mm	1
20720750000	8698673427587	20710750000	8698673414457	75 mm	1
20720800000	8698673427594	20710800000	8698673414464	80 mm	1
20720850000	8698673427600	20710850000	8698673414471	85 mm	1
20720900000	8698673427617	20710900000	8698673414488	90 mm	1
20720950000	8698673427624	20710950000	8698673414495	95 mm	1
20720000000	8698673427549	20710000000	8698673414365	100 mm	1
20720050000	8698673427556	20710050000	8698673414372	105 mm	1
20720100000	8698673427563	20710100000	8698673414389	110 mm	1

COMPRESSION SCREW

Titanium		Stainless Steel			
TST Code	Barcode	TST Code	Barcode	Length	Qty
20820250004	8698673427969	20810250004	8698673422322	25 mm	13

5 holes

Recommended Screws 4.5 mm Cortical, 4.5 mm Lock. Cortical, 6.5 mm Cancellous, 6.5 mm Lock. Cancellous

DYNAMIC CONDYLAR SCREW (DCS) PLATES

Indications: For supracondylar fractures and intercondylar T and Y type fractures.

Plate Profile: Thickness: 6.5 mm, Width: 19.0 mm, Distance between holes: 16.0 mm

	TST Code	Barcode	Description	Material	Length (mm)
LW-04 Ti	33222950005	8698673427754	LC DYNAMIC CONDYLAR PLATE DCS LOCK 95° 5 HOLES	Ti	112
	33222950006	8698673427761	LC DYNAMIC CONDYLAR PLATE DCS LOCK 95° 6 HOLES	Ti	128
	33222950008	8698673427785	LC DYNAMIC CONDYLAR PLATE DCS LOCK 95° 8 HOLES	Ti	160
	33222950010	8698673427808	LC DYNAMIC CONDYLAR PLATE DCS LOCK 95° 10HOLES	Ti	192
	33222950012	8698673427815	LC DYNAMIC CONDYLAR PLATE DCS LOCK 95° 12HOLES	Ti	230
	33222950014	8698673427822	LC DYNAMIC CONDYLAR PLATE DCS LOCK 95° 14HOLES	Ti	162
LW-05 SS	33212950005	8698673414167	DCS PLATE 95° 5 HOLES	S.STEEL	92
	33212950006	8698673414174	DCS PLATE 95° 6 HOLES	S.STEEL	108
	33212950008	8698673414198	DCS PLATE 95° 8 HOLES	S.STEEL	140
	33212950010	8698673414068	DCS PLATE 95° 10 HOLES	S.STEEL	172
	33212950012	8698673414082	DCS PLATE 95° 12 HOLES	S.STEEL	204
	33212950014	8698673414105	DCS PLATE 95° 14 HOLES	S.STEEL	236

6 holes

Recommended Screws 4.5 mm Cortical, 4.5 mm Lock. Cortical, 6.5 mm Cancellous, 6.5 mm Lock. Cancellous

LW-04 Ti / LW-05 SS DHS/DCS Plates Set

TROCHANTER MAJOR STABILIZATION PLATES*

Indications: Unstable A2 and A3 fractures, especially multifragmentary ones with a separated greater trochanter. Excessive secondary fracture impact and medialization of the femoral shaft can be avoided by combining the DHS with the trochanter major stabilization plate. Fixation of the greater trochanter with locking head screws reduces varus angulation and limb shortening. Stabilizing the greater trochanter can reduce internal bleeding and restores the function of the gluteus medius. This results in less postoperative pain and a faster mobilization of the patient.

Plate Profile: Thickness: 2.5 mm, Width: 25.0 mm, Distance between holes: 16.0 mm

TST Code	Barcode	Description	Material	Length (mm)
30720000008	8699931014211	TROCHANTER MAJOR STABILIZATION PLATE	Ti	132

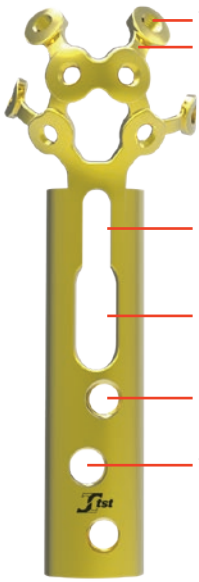

Threaded holes for the insertion of 3.5 mm locking screws
Arms that can be cut with the plate cutter

Proximal slot for the Cannulated Screw (antirotation)

Distal slot for the DHS Lag Screw

4.5 mm Cortical Screw hole for fixing the plate through the DHS plate to the femur

The second proximal hole acts as a window and has a larger diameter than the 4.5 mm cortex screw head allowing for previous fixation of the DHS plate to the femur.

Compatible instrument Sets: LW-04 DHS-DCS Plate Set, CS-06 Cannulated 6.5 mm Screw Set, UP-01 Upper Extremity Plate Set for Ø3.5mm Locking Cortical Screws

Screws

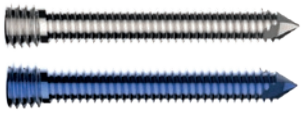

LOCKING CORTICAL SCREW Ø 4.5 MM

Titanium		Stainless Steel			
TST Code	Barcode	TST Code	Barcode	Length	Qty
20227160045	8698673417793	20217160045	8698673449305	16	5
20227180045	8698673417809	20217180045	8698673449312	18	5
20227200045	8698673417816	20217200045	8698673449329	20	5
20227220045	8698673417823	20217220045	8698673449336	22	5
20227240045	8698673417830	20217240045	8698673449343	24	5
20227260045	8698673417847	20217260045	8698673449350	26	5
20227280045	8698673417854	20217280045	8698673449367	28	5
20227300045	8698673417861	20217300045	8698673449374	30	5
20227320045	8698673417878	20217320045	8698673449381	32	5
20227340045	8698673417885	20217340045	8698673449398	34	5
20227360045	8698673417892	20217360045	8698673449404	36	5
20227380045	8698673417908	20217380045	8698673449411	38	5
20227400045	8698673417915	20217400045	8698673449428	40	5
20227420045	8698673417922	20217420045	8698673449435	42	5
20227440045	8698673417939	20217440045	8698673449442	44	5
20227460045	8698673417946	20217460045	8698673449459	46	5
20227480045	8698673417953	20217480045	8698673449466	48	5
20227500045	8698673417960	20217500045	8698673449473	50	5

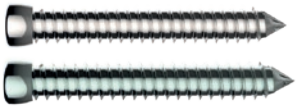

CORTICAL SCREW Ø 4.5 MM

Titanium		Stainless Steel			
TST Code	Barcode	TST Code	Barcode	Length	Qty
20220160045	8698673417298	20210160045	8698673412538	16	4
20220180045	8698673417304	20210180045	8698673412545	18	4
20220200045	8698673417311	20210200045	8698673412552	20	4
20220220045	8698673417328	20210220045	8698673412569	22	4
20220240045	8698673417335	20210240045	8698673412576	24	4
20220260045	8698673417342	20210260045	8698673412583	26	4
20220280045	8698673417359	20210280045	8698673412590	28	4
20220300045	8698673417366	20210300045	8698673412606	30	4
20220320045	8698673417373	20210320045	8698673412613	32	4
20220340045	8698673417380	20210340045	8698673412620	34	4
20220360045	8698673417397	20210360045	8698673412637	36	4
20220380045	8698673417403	20210380045	8698673412644	38	4
20220400045	8698673417410	20210400045	8698673412651	40	4
20220420045	8698673417427	20210420045	8698673412668	42	4
20220440045	8698673417434	20210440045	8698673412675	44	4
20220460045	8698673417441	20210460045	8698673412682	46	4
20220480045	8698673417458	20210480045	8698673412699	48	4
20220500045	8698673417465	20210500045	8698673412705	50	4

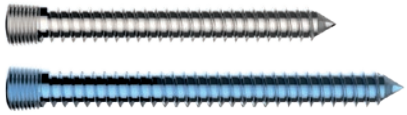

LOCKING CANCELLOUS SCREW Ø 6.5 MM

Titanium		Stainless Steel			
TST Code	Barcode	TST Code	Barcode	Length	Qty
20427300065	8698673416956	20417300065	8698673449749	30	3
20427350065	8698673416963	20417350065	8698673449756	35	3
20427400065	8698673416970	20417400065	8698673449763	40	6
20427450065	8698673416987	20417450065	8698673449770	45	6
20427500065	8698673416994	20417500065	8698673459793	50	6
20427550065	8698673417007	20417550065	8698673449602	55	3
20427600065	8698673417014	20417600065	8698673449619	60	6
20427650065	8698673417021	20417650065	8698673449626	65	3
20427700065	8698673417038	20417700065	8698673449633	70	3
20427750065	8698673417045	20417750065	8698673449640	75	3
20427800065	8698673417052	20417800065	8698673449657	80	3
20427850065	8698673422391	20417850065	8698673449664	85	3
20427900065	8698673424654	20417900065	8698673449671	90	3
20427100065	8698673476691	20417100065	8698673449695	100	3

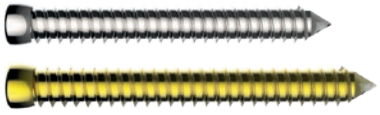

CANCELLOUS SCREW (32 THREAD) Ø 6.5 MM

Titanium		Stainless Steel			
TST Code	Barcode	TST Code	Barcode	Length	Qty
20420303265	8698673421653	20410303265	8698673411579	30	2
20420353265	8698673421660	20410353265	8698673411586	35	2
20420403265	8698673421677	20410403265	8698673411593	40	2
20420453265	8698673421684	20410453265	8698673411609	45	2
20420503265	8698673421691	20410503265	8698673411616	50	2
20420553265	8698673421707	20410553265	8698673411623	55	2
20420603265	8698673421714	20410603265	8698673411630	60	2
20420653265	8698673421721	20410653265	8698673411647	65	2
20420703265	8698673421738	20410703265	8698673411654	70	2
20420753265	8698673421745	20410753265	8698673411661	75	2
20420803265	8698673421752	20410803265	8698673411678	80	2
20420853265	8698673421769	20410853265	8698673411685	85	2
20420903265	8698673421776	20410903265	8698673411692	90	2
20420953265	8698673421783	20410953265	8698673411708	95	2
20421003265	8698673421622	20411003265	8698673411531	100	2

Plates & Instruments

No	TST Code	Barcode	Description	Quantity
1	00000207100	8699931017212	DHS & DCS 1. DESIGN TRAY	1
	33222950005	8698673427754	PLATES DCS 95° (5, 6, 8, 10, 12, 14 HOLES)	6
2	03350000000	8699931017786	DCS ANGLE GUIDE	1
3	00000207200	8699931017229	DHS & DCS 2. DESIGN TRAY	1
	33222350003	8698673427648	PLATES DHS 135° (3, 4, 5, 6, 7, 8, 10, 12, 14 HOLES)	9
4	03325100000	8698673495791	DHS ADJUSTABLE ANGLE GUIDE	1
5	00000207300	8699931017236	DHS & DCS 3. DESIGN TRAY	1
6	03325800000	8698673495357	GUIDE SHAFT	1
7	02005100035	8699931026689	THREADED DRILL GUIDE Ø3.5 MM	2
8	02005100045	8699931026696	THREADED DRILL GUIDE Ø4.5 MM	2
9	03325500000	8698673493773	TAP FOR LAG SCREW	1
10	08040000151	8698673494800	PLATE IMPACTOR	1
11	02005000100	8698673497047	DEPTH GAUGE - LOWER EXTREMITY PLATE	1
12	02020101035	8698673493322	SCREW DRIVER QUICK Ø 3.5 MM	1
13	02010101002	8698673493308	SOFT SCREW DRIVER QUICK LARGE	1
14	02030101045	8698673440715	QUICK TAP Ø 4.5 MM	1
15	01193000023	8698673493780	T QUICK HANDLE	1
16	03325400000	8698673493568	TRIPLE REAMER FOR DHS	1
17	03325300000	8698673493575	TRIPLE REAMER FOR DCS	1
18	00000207400	8699931017243	DHS & DCS 4. DESIGN TRAY	1
19	22310160035	8698673458826	BONE DRILL 3.5X60X160 MM	1
20	22310200045	8698673450493	BONE DRILL 4.5 X 200 MM	2
21	23410250125	8698673453227	KIRSCHNER WIRE TROCAR POINT 2.5X250 MM	1
21	23412250025	8698673452770	KIRSCHNER WIRE TREADED POINT 2.5X250 MM	2
21	04551208260	8699931029628	K-WIRE TUBE Ø12XØ8X260 MM	1
22	02050009020	8680858410989	LENGTH MEASURING DEVICE DHS & A-DHS	1
23	03325600000	8698673493803	T HANDLE WRENCH LONG	1
24	01193002009	8699931028126	BONE HAMMER - MEDIUM	1
	20720500000	8698673427945	DHS&DCS LAG SCREW Ti 50 MM -110 MM	13
	20820250004	8698673427969	COMPRESSION SCREW	13
	00000201200	8699931010817	LOWER EXTREMITY SCREW TRAY	1
	00560270150	8699931010275	CONTAINER 560X270X150 MM	1

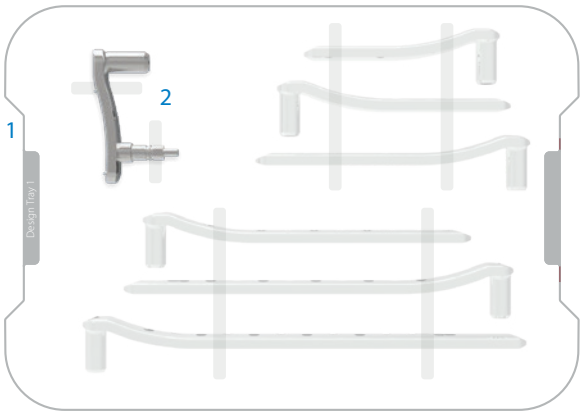

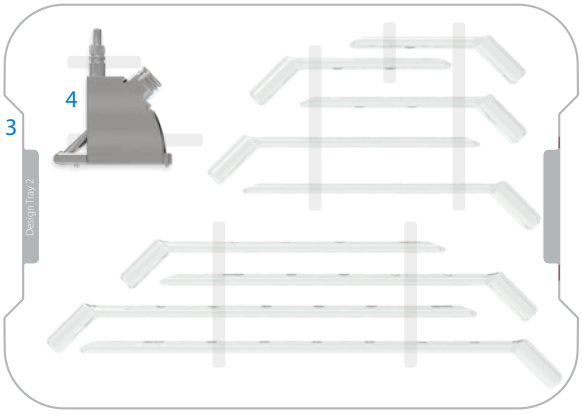

Instruments

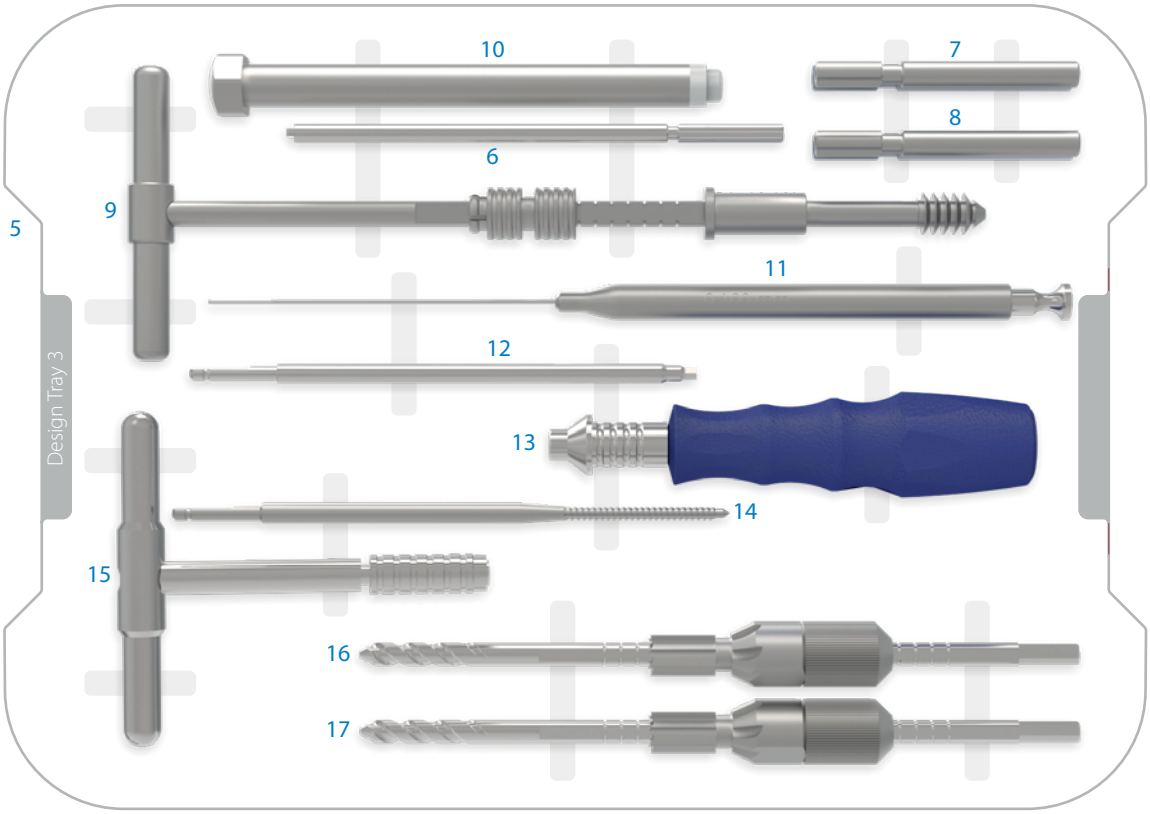

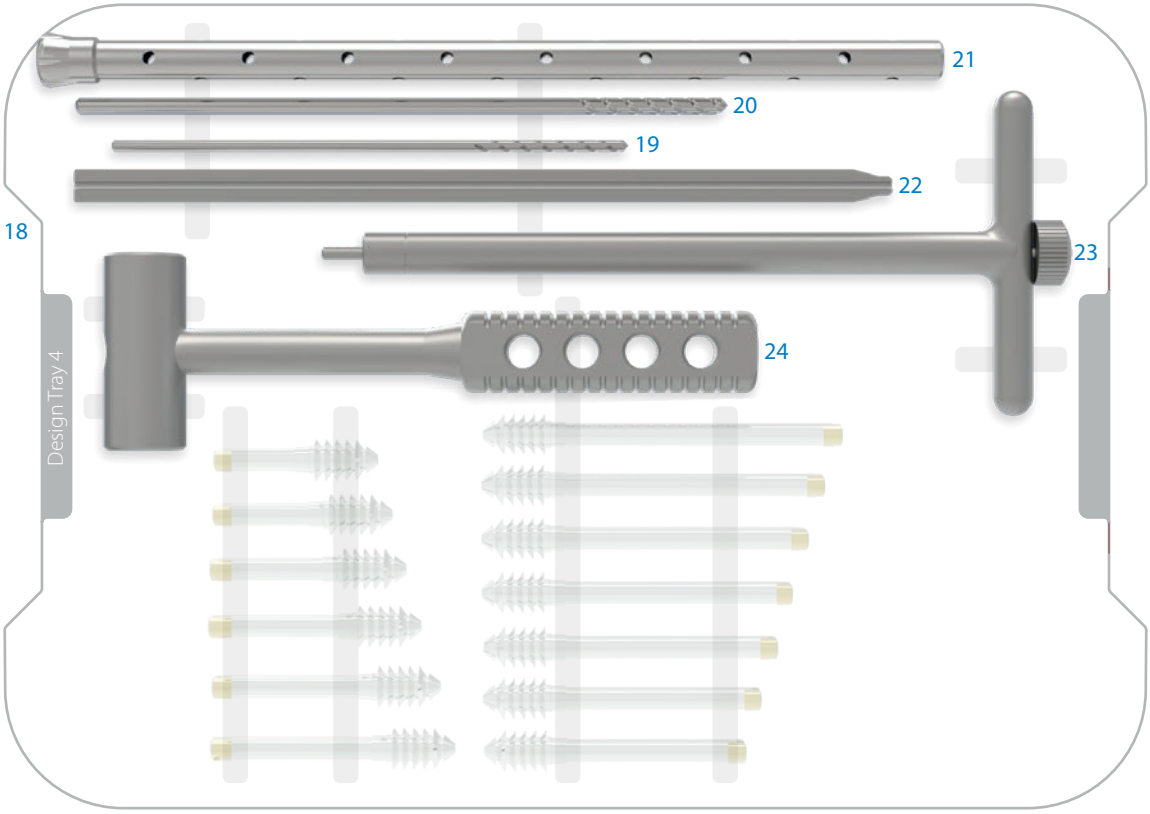

LW-36 LOWER EXTREMITY PLATES SET

PROXIMAL FEMUR PLATES

Indications: Proximal Femur Plate is indicated for the treatment of fractures of the trochanteric region including simple intertrochanteric, reverse intertrochanteric, transverse trochanteric, complex multifragmentary and fractures with medial cortex instability. Proximal femur fractures with ipsilateral shaft fractures and metastatic proximal femur fractures. Proximal femur osteotomies, fractures in osteopenic bone, nonunions and malunions, basi/transcervical femoral neck fractures, subcapital femoral neck fractures and subtrochanteric femur fractures.

Plate Profile: Thickness: 6.5 mm, Width: 18.0 mm, Distance between holes: 21.5 mm

TST Code	Barcode	Description	Side	Material	Length (mm)
31625700007	8699931016178	PROX. FEMUR LOCKING PLATE CONICAL HOLES 7 H	R	Ti	155
31625700009	8699931016161	PROX. FEMUR LOCKING PLATE CONICAL HOLES 9 H	R	Ti	198
31625700011	8699931016192	PROX. FEMUR LOCKING PLATE CONICAL HOLES 11 H	R	Ti	241
31625700013	8699931016185	PROX. FEMUR LOCKING PLATE CONICAL HOLES 13 H	R	Ti	285
31626700007	8699931016215	PROX. FEMUR LOCKING PLATE CONICAL HOLES 7 H	L	Ti	155
31626700009	8699931016208	PROX. FEMUR LOCKING PLATE CONICAL HOLES 9 H	L	Ti	198
31626700011	8699931016239	PROX. FEMUR LOCKING PLATE CONICAL HOLES 11 H	L	Ti	241
31626700013	8699931016222	PROX. FEMUR LOCKING PLATE CONICAL HOLES 13 H	L	Ti	285

9 holes

Recommended Screws 5.0 mm Cortical, 5.0 mm Lock. Cortical, 5.5 mm Cancellous, 5.5 mm Lock. Cancellous

FEMUR PLATES

Indications: Osteosynthesis of femoral shaft fractures allowing buttressing, neutralization, tension banding, bridging, compression.

Plate Profile: Thickness: 6.5 mm, Width: 18.0 mm, Distance between holes: 21.0 mm

Cat. Code	Barcode	Description	Material	Length (mm)
30227100006	8698673438101	LC DCP CONICAL BOW LOCK FEMORAL PLATE 6 H	Ti	142
30227100007	8698673438118	LC DCP CONICAL BOW LOCK FEMORAL PLATE 7 H	Ti	168
30227100008	8698673438125	LC DCP CONICAL BOW LOCK FEMORAL PLATE 8 H	Ti	190
30227100009	8698673438132	LC DCP CONICAL BOW LOCK FEMORAL PLATE 9 H	Ti	212
30227100010	8698673438057	LC DCP CONICAL BOW LOCK FEMORAL PLATE 10 H	Ti	233
30227100011	8698673438064	LC DCP CONICAL BOW LOCK FEMORAL PLATE TI 11 H	Ti	254
30227100012	8698673438071	LC DCP CONICAL BOW LOCK FEMORAL PLATE TI 12 H	Ti	276
30227100013	8698673438088	LC DCP CONICAL BOW LOCK FEMORAL PLATE TI 13 H	Ti	298
30227100014	8698673438095	LC DCP CONICAL BOW LOCK FEMORAL PLATE TI 14 H	Ti	320

12 holes

Recommended Screws 5.0 mm Cortical, 5.0 mm Lock. Cortical, 5.5 mm Cancellous, 5.5 mm Lock. Cancellous

TIBIA PLATES

Indications: Osteosynthesis of bones, such as femur or tibia, allowing buttressing, neutralization, tension banding, bridging and compression.

Plate Profile: Thickness: 5.0 mm, Width: 14.0 mm, Distance between holes: 21.0 mm

TST Code	Barcode	Description	Material	Length (mm)
30127000106	8699931013788	LC DCP INTERLOCKING CONICAL TIBIAL PLATES 6 HOLES	Ti	138
30127000107	8699931013795	LC DCP INTERLOCKING CONICAL TIBIAL PLATES 7 HOLES	Ti	159
30127000108	8699931013801	LC DCP INTERLOCKING CONICAL TIBIAL PLATES 8 HOLES	Ti	180
30127000109	8699931013818	LC DCP INTERLOCKING CONICAL TIBIAL PLATES 9 HOLES	Ti	201
30127000110	8699931013825	LC DCP INTERLOCKING CONICAL TIBIAL PLATES 10 HOLES	Ti	222
30127000111	8699931013832	LC DCP INTERLOCKING CONICAL TIBIAL PLATES 11 HOLES	Ti	243
30127000112	8699931013849	LC DCP INTERLOCKING CONICAL TIBIAL PLATES 12 HOLES	Ti	264
30127000113	8699931013856	LC DCP INTERLOCKING CONICAL TIBIAL PLATES 13 HOLES	Ti	285
30127000114	8699931013863	LC DCP INTERLOCKING CONICAL TIBIAL PLATES 14 HOLES	Ti	306

8 holes

Recommended Screws 5.0 mm Cortical, 5.0 mm Lock. Cortical, 5.5 mm Cancellous, 5.5 mm Lock. Cancellous

LW-36 Lower Extremity Plates Set

DISTAL FEMUR MEDIAL OSTEOTOMY PLATES*

Indications: Unicompartmental lateral gonarthrosis with valgus malalignment of the distal femur and idiopathic or posttraumatic valgus deformity of the distal femur. Distal femur medial plates are for closed-wedge osteotomies and have a fixed angle construct for stable fixation. The plates are available in right or left version and are designed according to the principles of the locking compression plate. In the distal section there are four threaded holes and the directions of them are adapted to the anatomy of the supracondylar femur.

Plate Profile: Thickness: 4.5 mm, Width: 15.0 mm, Distance between holes: 18.0 mm.

TST Code	Barcode	Description	Side	Material	Length (mm)
35125730008	8698673463295	LCP DIST.FEM.MED.OSTEOT.LOCK PLATE 8 HOLES	R	Ti	115
35126730008	8698673463318	LCP DIST.FEM.MED.OSTEOT.LOCK PLATE 8 HOLES	L	Ti	115

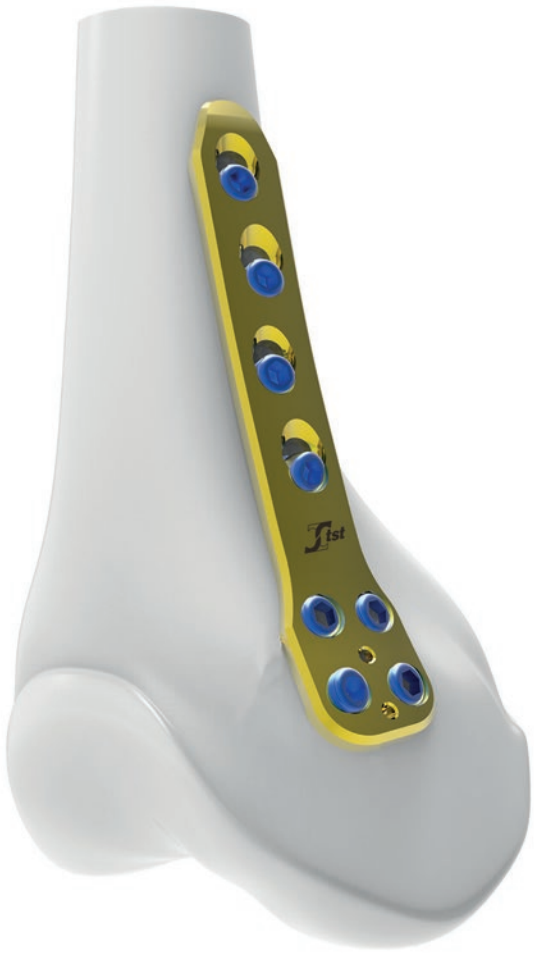

8 holes

Recommended Screws 5.0 mm Cortical, 5.0 mm Lock. Cortical, 5.5 mm Cancellous, 5.5 mm Lock. Cancellous

Instruments

LOCKING CORTEX SCREW CONICAL HEAD SELFT Ti Ø 5 MM

TST Code	Barcode	Length	Qty
20127180050	8698673429604	18 mm	5
20127200050	8698673429611	20 mm	5
20127220050	8698673429628	22 mm	5
20127240050	8698673429635	24 mm	5
20127260050	8698673429642	26 mm	5
20127280050	8698673429659	28 mm	5
20127300050	8698673429666	30 mm	5
20127320050	8698673429673	32 mm	5
20127340050	8698673429680	34 mm	5
20127360050	8698673429697	36 mm	5
20127380050	8698673429703	38 mm	5
20127400050	8698673429710	40 mm	5
20127450050	8698673429727	45 mm	5
20127500050	8698673429734	50 mm	5
20127550050	8698673429741	55 mm	5
20127600050	8698673429758	60 mm	5
20127650050	8698673429765	65 mm	5
20127700050	8698673429772	70 mm	5

CORTEX SCREW CONICAL HEAD Ti Ø 5 MM

TST Code	Barcode	Length	Qty
20120180050	8698673429376	18 mm	4
20120200050	8698673429383	20 mm	4
20120220050	8698673429390	22 mm	4
20120240050	8698673429406	24 mm	4
20120260050	8698673429413	26 mm	4
20120280050	8698673429420	28 mm	4
20120300050	8698673429437	30 mm	4
20120320050	8698673429444	32 mm	4
20120340050	8698673429451	34 mm	4
20120360050	8698673429468	36 mm	4
20120380050	8698673429475	38 mm	4
20120400050	8698673429482	40 mm	4
20120450050	8698673429499	45 mm	4
20120500050	8698673429505	50 mm	4
20120550050	8698673429512	55 mm	4
20120600050	8698673429529	60 mm	4
20120650050	8698673429536	65 mm	4
20120700050	8698673429543	70 mm	4

LOCK CORTICO CANCEL. CONICAL HEAD SELFT Ti Ø 5.5 MM

TST Code	Barcode	Length	Qty
20127500055	8698673438194	50 mm	4
20127550055	8698673438200	55 mm	4
20127600055	8698673438217	60 mm	4
20127650055	8698673438224	65 mm	4
20127700055	8698673438231	70 mm	4
20127750055	8698673438248	75 mm	4
20127800055	8698673438255	80 mm	4
20127850055	8698673438262	85 mm	4
20127900055	8698673438279	90 mm	4
20127950055	8698673438286	95 mm	4
20127100055	8698673438149	100 mm	4
20127105055	8698673438156	105 mm	4

CORTICO CANCELLOUS CONICAL HEAD SELFT Ti Ø 5.5 MM

TST Code	Barcode	Length	Qty
20120500055	8698673437883	50 mm	4
20120550055	8698673437890	55 mm	4
20120600055	8698673437906	60 mm	4
20120650055	8698673437913	65 mm	4
20120700055	8698673437920	70 mm	4
20120750055	8698673437937	75 mm	4
20120800055	8698673437944	80 mm	4
20120850055	8698673437951	85 mm	4
20120900055	8698673437968	90 mm	4
20120950055	8698673437975	95 mm	4
20120100055	8698673437982	100 mm	4
20120105055	8698673437999	105 mm	4

CANNULATED LOCK.CANCEL.SCREW Ti Ø 5.5 MM

TST Code	Barcode	Length	Qty
20327950055	8680858405121	50 mm	2
20327955055	8680858405138	55 mm	2
20327960055	8680858405145	60 mm	2
20327965055	8680858405152	65 mm	2
20327970055	8680858405169	70 mm	2
20327975055	8680858405176	75 mm	2
20327980055	8680858405183	80 mm	2
20327985055	8680858405190	85 mm	2
20327990055	8680858405206	90 mm	2
20327995055	8680858405213	95 mm	2
20327910055	8680858405220	100 mm	2
20327910555	8680858405237	105 mm	2

CANNULATED PARTIAL THREAD SCREW Ti Ø 5.5 MM

TST Code	Barcode	Length	Qty
20328950055	8680858405244	50 mm	2
20328955055	8680858405251	55 mm	2
20328960055	8680858405268	60 mm	2
20328965055	8680858405275	65 mm	2
20328970055	8680858405282	70 mm	2
20328975055	8680858405299	75 mm	2
20328980055	8680858405305	80 mm	2
20328985055	8680858405312	85 mm	2
20328990055	8680858405329	90 mm	2
20328995055	8680858405336	95 mm	2
20328910055	8680858405343	100 mm	2
20328910555	8680858405350	105 mm	2

SCREW WASHER Ti Ø 13 MM

TST Code	Barcode	Diameter	Qty
20820000013	8698673428683	13	5

Plates

for detail page 82

TST Code	Barcode	Description	Qty
00000201330	**8680858443949**	**LOWER EXTREMITY PLATES CONICAL 3. DESIGN TRAY**	**1**
30227100006	8698673438101	LC DCPCONICAL BOW LOCK FEMORAL PLATE TI 6 HOLES	1
30227100007	8698673438118	LC DCPCONICAL BOW LOCK FEMORAL PLATE TI 7 HOLES	1
30227100008	8698673438125	LC DCPCONICAL BOW LOCK FEMORAL PLATE TI 8 HOLES	1
30227100009	8698673438132	LC DCPCONICAL BOW LOCK FEMORAL PLATE TI 9 HOLES	1
30227100010	8698673438057	LC DCPCONICAL BOW LOCK FEMORAL PLATE TI 10 HOLES	1
30227100011	8698673438064	LC DCPCONICAL BOW LOCK FEMORAL PLATE TI 11 HOLES	1
30227100012	8698673438071	LC DCPCONICAL BOW LOCK FEMORAL PLATE TI 12 HOLES	1
30227100013	8698673438088	LC DCPCONICAL BOW LOCK FEMORAL PLATE TI 13 HOLES	1
30227100014	8698673438095	LC DCPCONICAL BOW LOCK FEMORAL PLATE TI 14 HOLES	1

for detail page 91

35125710111	8698673428638	MISS LC DISTAL FEMUR PLATE TI R 11 HOLES	1
35125710113	8698673428645	MISS LC DISTAL FEMUR PLATE TI R 13 HOLES	1
35125710115	8698673428737	MISS LC DISTAL FEMUR PLATE TI R 15 HOLES	1
35125710117	8698673428744	MISS LC DISTAL FEMUR PLATE TI R 17 HOLES	1
35126710111	8698673428591	MISS LC DISTAL FEMUR PLATE TI L 11 HOLES	1
35126710113	8698673428607	MISS LC DISTAL FEMUR PLATE TI L 13 HOLES	1
35126710115	8698673428614	MISS LC DISTAL FEMUR PLATE TI L 15 HOLES	1
35126710117	8698673428621	MISS LC DISTAL FEMUR PLATE TI L 17 HOLES	1

for detail page 101

00000201340	**8680858443956**	**LOWER EXTREMITY PLATES CONICAL 4. DESIGN TRAY**	**1**
35025710107	8698673444836	MISS LC PROXIMAL TIBIA LATERAL PLATE R 7 HOLES	1
35025710109	8698673444843	MISS LC PROXIMAL TIBIA LATERAL PLATE R 9 HOLES	1
35025710111	8698673438521	MISS LC PROXIMAL TIBIA LATERAL PLATE R 11 HOLES	1
35025710113	8698673444850	MISS LC PROXIMAL TIBIA LATERAL PLATE R 13 HOLES	1
35026710107	8698673444881	MISS LC PROXIMAL TIBIA LATERAL PLATE L 7 HOLES	1
35026710109	8698673444898	MISS LC PROXIMAL TIBIA LATERAL PLATE L 9 HOLES	1
35026710111	8698673444911	MISS LC PROXIMAL TIBIA LATERAL PLATE L 11 HOLES	1
35026710113	8698673444935	MISS LC PROXIMAL TIBIA LATERAL PLATE L 13 HOLES	1

for detail page 102

35025710207	8698673446007	MISS LC PROXIMAL TIBIA MEDIAL PLATE R 7 HOLES	1
35025710209	8698673446014	MISS LC PROXIMAL TIBIA MEDIAL PLATE R 9 HOLES	1
35025710211	8698673446021	MISS LC PROXIMAL TIBIA MEDIAL PLATE R 11 HOLES	1
35025710213	8698673446038	MISS LC PROXIMAL TIBIA MEDIAL PLATE R 13 HOLES	1
35025710215	8698673440227	MISS LC PROXIMAL TIBIA MEDIAL PLATE R 15 HOLES	1
35026710207	8698673444973	MISS LC PROXIMAL TIBIA MEDIAL PLATE L 7 HOLES	1
35026710209	8698673446045	MISS LC PROXIMAL TIBIA MEDIAL PLATE L 9 HOLES	1
35026710211	8698673446052	MISS LC PROXIMAL TIBIA MEDIAL PLATE L 11 HOLES	1
35026710213	8698673446069	MISS LC PROXIMAL TIBIA MEDIAL PLATE L 13 HOLES	1
35026710215	8698673440234	MISS LC PROXIMAL TIBIA MEDIAL PLATE L 15 HOLES	1

for detail page 83

30127000106	8699931013788	LC DCP INTERLOCKING CONICAL TIBIAL PLATES 6 HOLES	1
30127000107	8699931013795	LC DCP INTERLOCKING CONICAL TIBIAL PLATES 7 HOLES	1
30127000108	8699931013801	LC DCP INTERLOCKING CONICAL TIBIAL PLATES 8 HOLES	1
30127000109	8699931013818	LC DCP INTERLOCKING CONICAL TIBIAL PLATES 9 HOLES	1
30127000110	8699931013825	LC DCP INTERLOCKING CONICAL TIBIAL PLATES 10 HOLES	1
30127000111	8699931013832	LC DCP INTERLOCKING CONICAL TIBIAL PLATES 11 HOLES	1
30127000112	8699931013849	LC DCP INTERLOCKING CONICAL TIBIAL PLATES 12 HOLES	1
30127000113	8699931013856	LC DCP INTERLOCKING CONICAL TIBIAL PLATES 13 HOLES	1
30127000114	8699931013863	LC DCP INTERLOCKING CONICAL TIBIAL PLATES 14 HOLES	1

Instruments

No	TST Code	Barcode	Description	Qty
1	00000201310	8680858443925	LOWER EXTREMITY PLATES CONICAL 1. DESIGN TRAY	1
	31625700007	8699931016178	PROX. FEMUR LOCKING PLATE CONICAL HOLES TI R 7 H	1
	31625700009	8699931016161	PROX. FEMUR LOCKING PLATE CONICAL HOLES TI R 9 H	1
	31625700011	8699931016192	PROX. FEMUR LOCKING PLATE CONICAL HOLES TI R 11 H	1
	31625700013	8699931016185	PROX. FEMUR LOCKING PLATE CONICAL HOLES TI R 13 H	1
	31626700007	8699931016215	PROX. FEMUR LOCKING PLATE CONICAL HOLES TI L 7 H	1
	31626700009	8699931016208	PROX. FEMUR LOCKING PLATE CONICAL HOLES TI L 9 H	1
	31626700011	8699931016239	PROX. FEMUR LOCKING PLATE CONICAL HOLES TI L 11 H	1
	31626700013	8699931016222	PROX. FEMUR LOCKING PLATE CONICAL HOLES TI L 13 H	1
2	03160000001	8698673462250	MISS PROXIMAL FEMUR GUIDE R	1
3	03160000002	8698673462243	MISS PROXIMAL FEMUR GUIDE L	1
4	03160000007	8698673463783	MISS PROXIMAL FEMUR GUIDE IMPACTOR	1
5	03160000905	8699931024814	MISS PROXIMAL FEMUR GUIDE LOCKING CONICAL SCREW	1
6	08360045235	8699931030792	MISS PROX.FEMUR REDUC.DEVICE Ø 4.5X235MM	1
7	04050000008	8699931028379	WRENCH Ø 8 MM	1
8	00000201320	8680858443932	LOWER EXTREMITY PLATES CONICAL 2. DESIGN TRAY	1
9	02000415035	8699931029260	SCREW DRIVER QUICK HEX. TIP Ø 3.5X150 MM	1
10	02264260250	8699931030822	BONE DRILL 4.2X60X250MM CALIBR.FOR MISS PROX.FEMUR	2
11	02264560250	8699931030839	BONE DRILL 4.5X60X250MM CALIBR.FOR MISS PROX.FEMUR	1
12	02064580300	8699931032420	CANNULATED DRILL BIT Ø 4.5X2.1X45X250 MM	1
13	03501000042	8699931011005	CONIC THR.DRILL SLEEVE 4.2MM	2
14	03501000045	8699931030778	CONIC THR.DRILL SLEEVE 4.5MM	1
15	02006000100	8680858410972	DEPTH GAUGE - MISS LOWER EXT. OVER PLATE	1
16	01191000040	8699931008739	SCREW DRIVER TORQUE 3NM	1
17	02010101002	8698673493308	SOFT SCREW DRIVER QUICK LARGE	1
18	03160000004	8698673462267	MISS PROXIMAL FEMUR KIRSCHNER GUIDE	1
19	02055000335	8698673495715	CANNULATED SCREWDRIVER Ø 3.5 MM	1
20	03150020200	8699931030846	MEASURING DEVICE FOR K-WIRE 2X200 MM (PROX. FEMUR)	1
21	04551080210	8699931030808	K-WIRE TUBE Ø10XØ8X210 MM	1
21	23412200020	8698673452718	KIRSCHNER WIRE TREADED POINT 2X200 MM	2
21	23410200120	8698673453111	KIRSCHNER WIRE TROCAR POINT 2X200 MM	2
	00000205500	8699931023510	MISS FEMUR-TIBIA SCREW DESIGN TRAY	
	00560270170	8699931010787	CONTAINER 560X270X170 MM	

Instruments

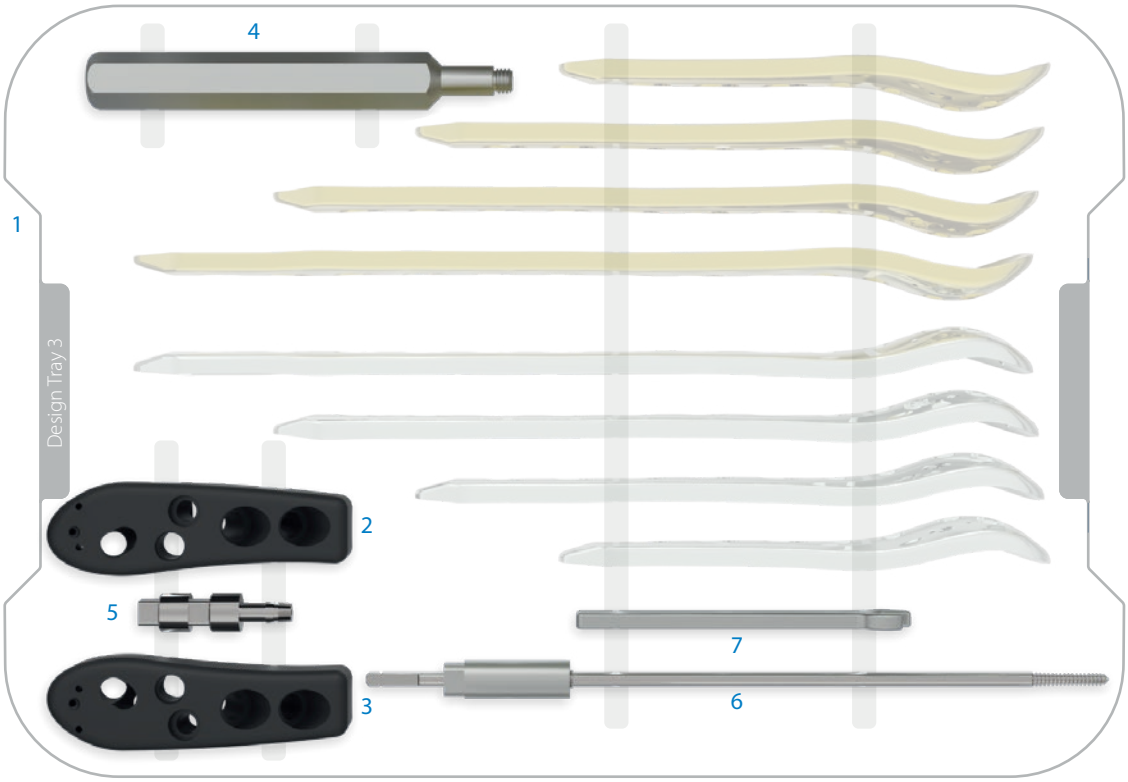

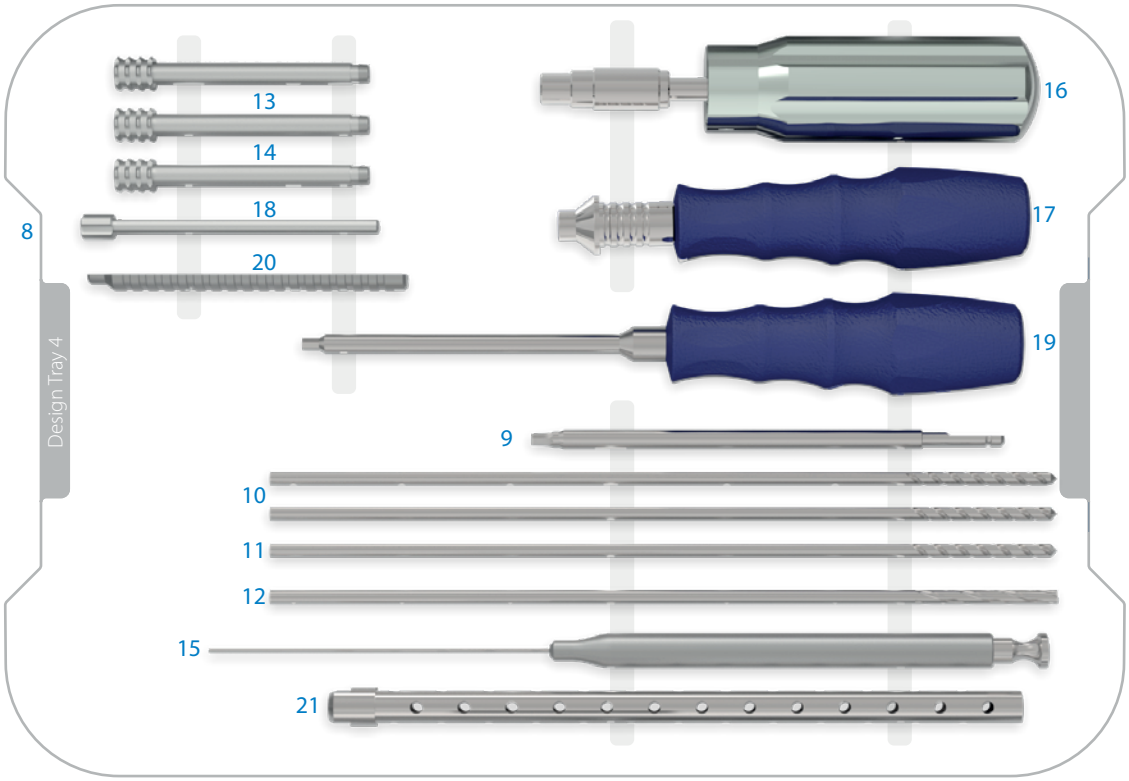

LW-30
MISS DISTAL FEMUR PLATES SET

MISS Distal Femur Plates

Indications: Distal shaft fractures, Periprosthetic fractures, supracondylar fractures and intra-articular fractures.

Plate Profile: Thickness: 6.0 mm, Width: 16.0 mm, Distance between holes: 20.5 mm.

TST Code	Barcode	Description	Side	Material	Length (mm)
35125710111	8698673428638	MISS LC DISTAL FEMUR PLATE 11 HOLES	R	Ti	152
35125710113	8698673428645	MISS LC DISTAL FEMUR PLATE 13 HOLES	R	Ti	193
35125710115	8698673428737	MISS LC DISTAL FEMUR PLATE 15 HOLES	R	Ti	234
35125710117	8698673428744	MISS LC DISTAL FEMUR PLATE 17 HOLES	R	Ti	275
35126710111	8698673428591	MISS LC DISTAL FEMUR PLATE 11 HOLES	L	Ti	152
35126710113	8698673428607	MISS LC DISTAL FEMUR PLATE 13 HOLES	L	Ti	193
35126710115	8698673428614	MISS LC DISTAL FEMUR PLATE 15 HOLES	L	Ti	234
35126710117	8698673428621	MISS LC DISTAL FEMUR PLATE 17 HOLES	L	Ti	275

17 holes

Recommended Screws 5.0 mm Cortical, 5.0 mm Lock. Cortical, 5.5 mm Cancellous, 5.5 mm Lock. Cancellous

Screws

LOCKING CORTEX SCREW CONICAL HEAD SELFT Ti Ø 5 MM

TST Code	Barcode	Length	Qty
20127180050	8698673429604	18 mm	5
20127200050	8698673429611	20 mm	5
20127220050	8698673429628	22 mm	5
20127240050	8698673429635	24 mm	5
20127260050	8698673429642	26 mm	5
20127280050	8698673429659	28 mm	5
20127300050	8698673429666	30 mm	5
20127320050	8698673429673	32 mm	5
20127340050	8698673429680	34 mm	5
20127360050	8698673429697	36 mm	5
20127380050	8698673429703	38 mm	5
20127400050	8698673429710	40 mm	5
20127450050	8698673429727	45 mm	5
20127500050	8698673429734	50 mm	5
20127550050	8698673429741	55 mm	5
20127600050	8698673429758	60 mm	5
20127650050	8698673429765	65 mm	5
20127700050	8698673429772	70 mm	5

CORTEX SCREW CONICAL HEAD Ti Ø 5 MM

TST Code	Barcode	Length	Qty
20120180050	8698673429376	18 mm	4
20120200050	8698673429383	20 mm	4
20120220050	8698673429390	22 mm	4
20120240050	8698673429406	24 mm	4
20120260050	8698673429413	26 mm	4
20120280050	8698673429420	28 mm	4
20120300050	8698673429437	30 mm	4
20120320050	8698673429444	32 mm	4
20120340050	8698673429451	34 mm	4
20120360050	8698673429468	36 mm	4
20120380050	8698673429475	38 mm	4
20120400050	8698673429482	40 mm	4
20120450050	8698673429499	45 mm	4
20120500050	8698673429505	50 mm	4
20120550050	8698673429512	55 mm	4
20120600050	8698673429529	60 mm	4
20120650050	8698673429536	65 mm	4
20120700050	8698673429543	70 mm	4

LOCK CORTICO CANCEL CONICAL HEAD SELFT Ti Ø 5.5 MM

TST Code	Barcode	Length	Qty
20127500055	8698673438194	50 mm	4
20127550055	8698673438200	55 mm	4
20127600055	8698673438217	60 mm	4
20127650055	8698673438224	65 mm	4
20127700055	8698673438231	70 mm	4
20127750055	8698673438248	75 mm	4
20127800055	8698673438255	80 mm	4
20127850055	8698673438262	85 mm	4
20127900055	8698673438279	90 mm	4
20127950055	8698673438286	95 mm	4
20127100055	8698673438149	100 mm	4
20127105055	8698673438156	105 mm	4

CORTICO CANCELLOUS CONICAL HEAD SELFT Ti Ø 5.5 MM

TST Code	Barcode	Length	Qty
20120500055	8698673437883	50 mm	4
20120550055	8698673437890	55 mm	4
20120600055	8698673437906	60 mm	4
20120650055	8698673437913	65 mm	4
20120700055	8698673437920	70 mm	4
20120750055	8698673437937	75 mm	4
20120800055	8698673437944	80 mm	4
20120850055	8698673437951	85 mm	4
20120900055	8698673437968	90 mm	4
20120950055	8698673437975	95 mm	4
20120100055	8698673437982	100 mm	4
20120105055	8698673437999	105 mm	4

Plates & Instruments

No	TST Code	Barcode	Description	Quantity
1	00000206100	8699931023527	MISS FEMUR DESIGN 1. TRAY	1
	35125710111	8698673428638	MISS LC DISTAL FEMUR PLATE R (11,13,15,17 HOLES)	4
	35126710111	8698673428591	MISS LC DISTAL FEMUR PLATE L (11,13,15,17 HOLES)	4
2	03511500001	8698673493377	MISS DISTAL FEMUR GUIDE - R	1
3	03511600002	8698673440265	MISS DISTAL FEMUR GUIDE - L	1
4	08390010101	8699931030785	MISS GUIDE SCREW MARKER	5
5	00000206200	8699931023534	MISS FEMUR 2. DESIGN TRAY	1
6	03605000010	8698673493551	TROCAR Ø6.5 X 168 MM	1
7	03511000002	8699931019063	MISS DISTAL FEMUR K-WIRE SLEEVE Ø2 MM	1
8	03511000003	8698673440272	MISS DISTAL FEMUR DRILL GUIDE Ø 4.2 MM	2
9	04050000008	8699931028379	WRENCH Ø 8 MM	1
10	03511000008	8698673441224	MISS DISTAL FEMUR REDUCTION DEVICE	1
11	03511000004	8698673441194	MISS DISTAL FEMUR GUIDE LOCKING DEVICE	2
12	03511000006	8698673440289	MISS DISTAL FEMUR SCREW GUIDE	2
13	23410300120	8698673453142	KIRSCHNER WIRE TROCAR POINT 2X300 MM	4
13	04551080310	8699931030815	K-WIRE TUBE Ø10XØ8X310 MM	1
14	03511000010	8699931030297	D.GAUGE-MISS DIST.FEMUR&SHAFT PLATE-THROUGH SLEEVE	1
15	02006000100	8680858410972	DEPTH GAUGE - MISS LOWER EXT. OVER PLATE	1
16	03501000042	8699931011005	CONIC THR.DRILL SLEEVE 4.2MM	2
17	02231030042	8698673484795	BONE DRILL 4.2X60X300 MM	2
18	02020101035	8698673493322	SCREW DRIVER QUICK Ø 3.5 MM	1
19	02020220035	8699931023442	SCREW DRIVER QUICK HEX. TIP Ø 3.5X220 MM	2
20	01191000040	8699931008739	SCREW DRIVER TORQUE 3NM	1
21	02010101002	8698673493308	SOFT SCREW DRIVER QUICK LARGE	1
	00000205500	8699931023510	MISS FEMUR-TIBIA SCREW DESIGN TRAY	1
	00560270170	8699931010787	CONTAINER 560X270X170 MM	1

Instruments

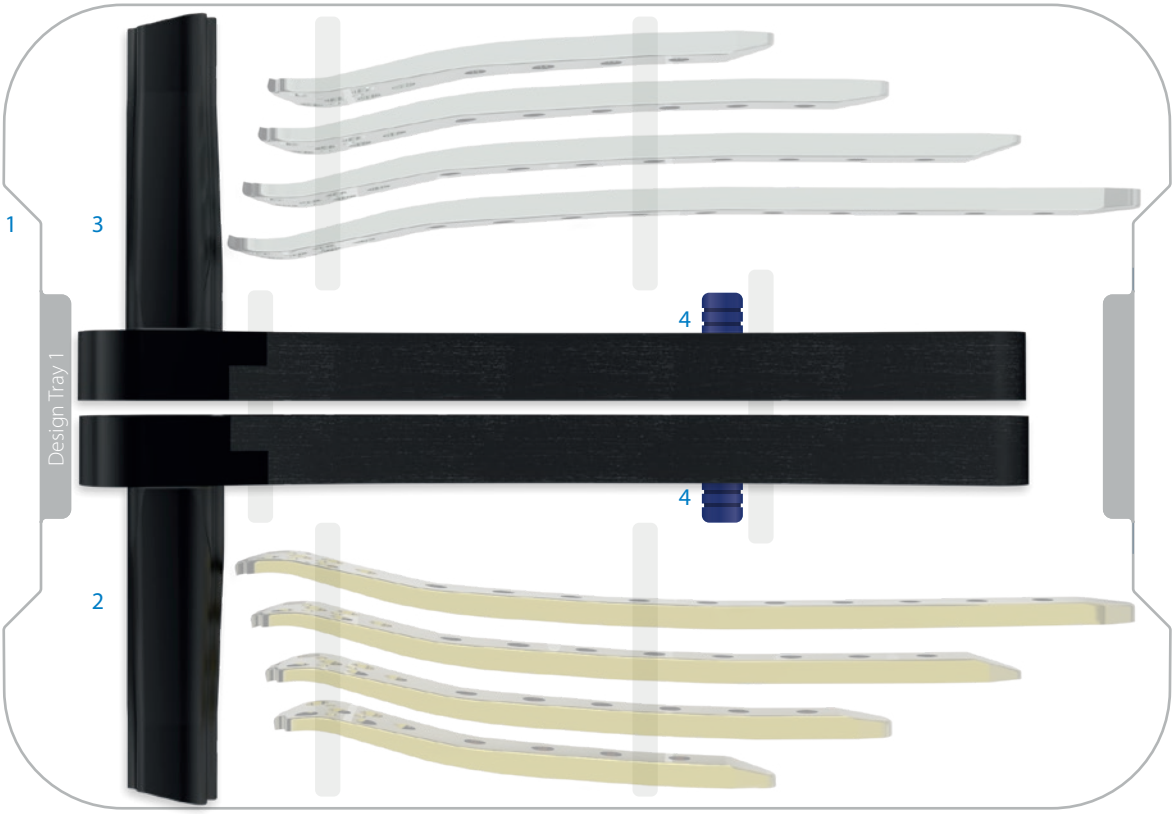

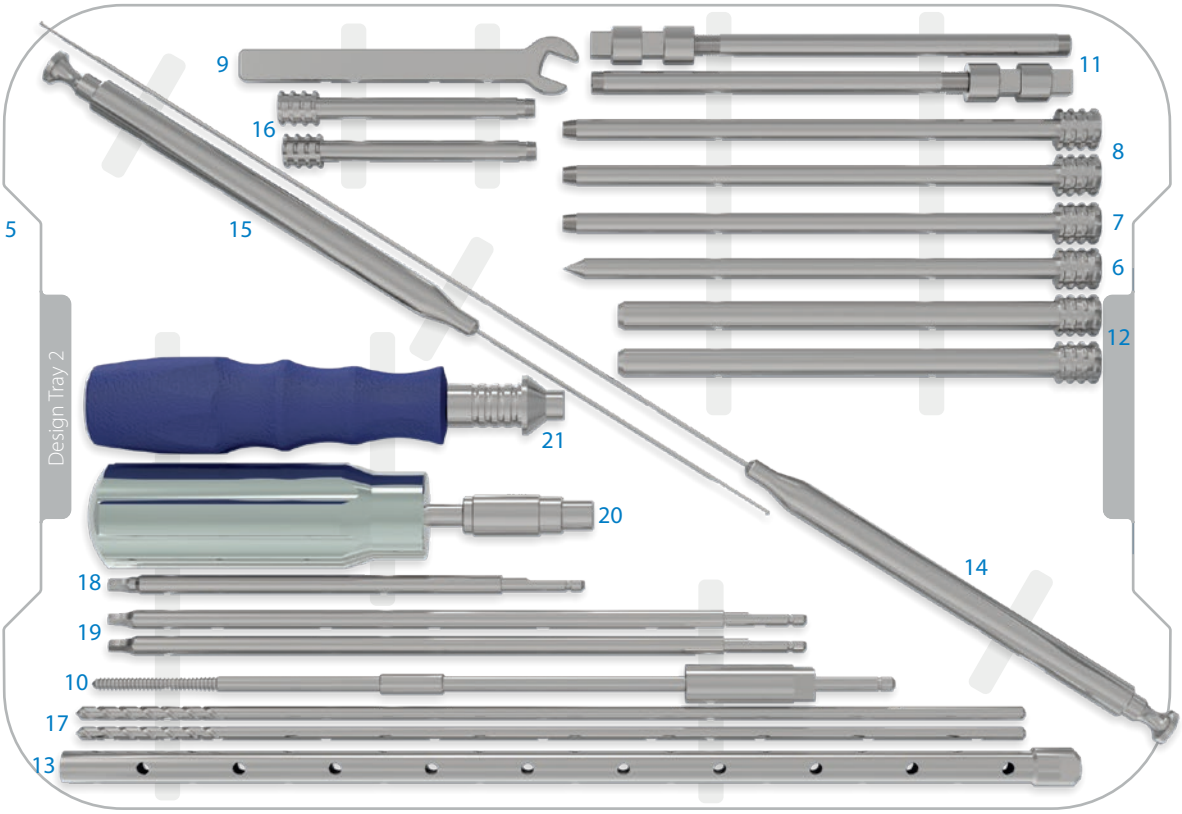

LW-28
OWO PLATES SET

OWO PLATES (HIGH TIBIAL OPEN WEDGE OSTEOTOMY PLATES)

Indications: High Tibial Open Wedge Osteotomy is a commonly used surgery method especially for young and active patients who have Medial Osteoarthritis with pain and Varus Deformity on their knees.
The aim is the acute correction of the mechanical axis from the injured medial plateau towards the lateral plateau.

Plate Profile: Thickness: 3.0 mm.

TST Code	Barcode	Description	Side	Material	Qty
34325000205	8698673419315	OWO ANATOMIC PLATE	R	Ti	4
34326000205	8698673419322	OWO ANATOMIC PLATE	L	Ti	4
34420000800	8699931029802	OWO BLOCK 8 MM	-	Ti	2
34420001000	8699931029819	OWO BLOCK 10 MM	-	Ti	2
34420001250	8699931029826	OWO BLOCK 12.5 MM	-	Ti	2
34420001500	8699931029833	OWO BLOCK 15 MM	-	Ti	2
21620080050	8698673419391	OWO BLOCK SCREW	-	Ti	16

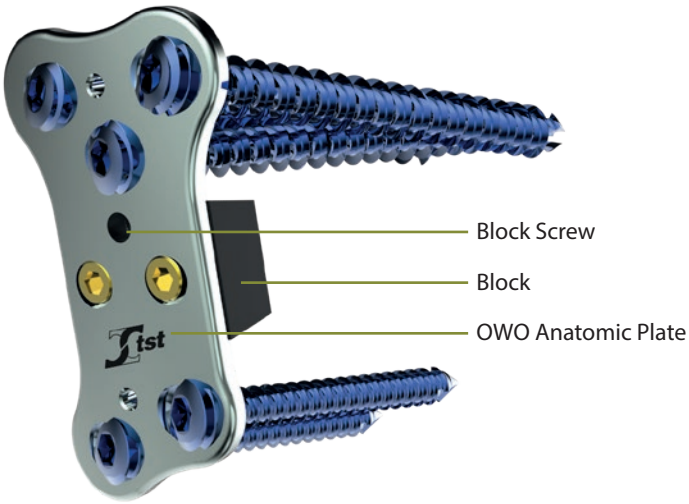

LOCKING CORTICAL SCREW Ti Ø 4.5 MM

TST Code	Barcode	Length	Qty
20227280045	8698673417854	28	2
20227300045	8698673417861	30	2
20227320045	8698673417878	32	2
20227340045	8698673417885	34	2
20227360045	8698673417892	36	2
20227380045	8698673417908	38	2
20227400045	8698673417915	40	2
20227420045	8698673417922	42	2
20227440045	8698673417939	44	2
20227460045	8698673417946	46	2
20227480045	8698673417953	48	2
20227500045	8698673417960	50	2
20227520045	8698673417977	52	2

CORTICAL SCREW Ti Ø 4.5 MM

TST Code	Barcode	Length	Qty
20220280045	8698673417359	28	2
20220300045	8698673417366	30	2
20220320045	8698673417373	32	2
20220340045	8698673417380	34	2
20220360045	8698673417397	36	2
20220380045	8698673417403	38	2
20220400045	8698673417410	40	2
20220420045	8698673417427	42	2
20220440045	8698673417434	44	2
20220460045	8698673417441	46	2
20220480045	8698673417458	48	2
20220500045	8698673417465	50	2
20220520045	8698673417472	52	2

LOCKING CANCELLOUS SCREW Ti Ø 6.5 MM

TST Code	Barcode	Length	Qty
20427300065	8698673416956	30	3
20427350065	8698673416963	35	3
20427400065	8698673416970	40	3
20427450065	8698673416987	45	3
20427500065	8698673416994	50	3
20427550065	8698673417007	55	3
20427600065	8698673417014	60	3
20427650065	8698673417021	65	3
20427700065	8698673417038	70	3
20427750065	8698673417045	75	3
20427800065	8698673417052	80	3

CANCELLOUS SCREW Ti Ø 6.5 MM

TST Code	Barcode	Length	Qty
20420300065	8698673421790	30	2
20420350065	8698673421806	35	2
20420400065	8698673421813	40	2
20420450065	8698673421820	45	2
20420500065	8698673421837	50	2
20420550065	8698673421844	55	2
20420600065	8698673421851	60	2
20420650065	8698673421868	65	2
20420700065	8698673421875	70	2
20420750065	8698673421882	75	2
20420800065	8698673421899	80	2

Instruments

No	TST Code	Barcode	Description	Quantity
1	**00000805100**	**8699931027969**	**OWO PLATE 1.DESIGN TRAY**	**1**
	34325000205	8698673419315	OWO ANATOMIC PLATES (Right, Left)	8
	34420000800	8699931029802	OWO BLOCK (8, 10, 12.5, 15 MM)	8
	21620080050	8698673419391	OWO BLOCK SCREW	16
2	08060000241	8698673494817	PLATE GUIDE R FOR OWO	1
3	08060000244	8698673494824	PLATE GUIDE L FOR OWO	1
4	02005100035	8699931026689	THREADED DRILL GUIDE Ø3.5 MM	1
5	02005100045	8699931026696	THREADED DRILL GUIDE Ø4.5 MM	1
6	03436025000	8698673494930	OSTEOTOME 25 MM	1
7	03436035000	8698673494909	OSTEOTOME 35 MM	1
8	03310016060	8680858409006	CHISEL BLADE 16X60 MM STRAIGHT	1
8	03310011060	8680858409013	CHISEL BLADE 11X60 MM STRAIGHT	1
9	03381000001	8699931023770	CHISEL HANDLE	1
10	04551080210	8699931030808	K-WIRE TUBE Ø10XØ8X210 MM	3
10	22310160035	8698673458826	BONE DRILL3.5X60X160 MM	2
10	22310200045	8698673450493	BONE DRILL 4.5 X 200 MM	2
10	23410200115	8698673452992	KIRSCHNER WIRE TROCAR POINT 1.5X200 MM	3
10	23410200120	8698673453111	KIRSCHNER WIRE TROCAR POINT 2X200 MM	10
10	23410201025	8680858419524	KIRSCHNER WIRE TROCAR POINT 2.5X200 MM	5
11	02005000100	8698673497047	DEPTH GAUGE - LOWER EXTREMITY PLATE	1
12	**00000805200**	**8699931027952**	**OWO PLATE 2.DESIGN TRAY**	**1**
13	08050000145	8698673497108	DISTRACTOR OSTEOTOME	1
14	02020103025	8699931010930	SCREW DRIVER QUICK TIP 2.5XØ5X130 MM	1
15	02010101002	8698673493308	SOFT SCREW DRIVER QUICK LARGE	1
16	02000415035	8699931029260	SCREW DRIVER QUICK HEX. TIP Ø 3.5X150 MM	1
17	03435000080	8698673494893	AUTOMATIC DISTRACTOR	1
18	01193001009	8699931028140	BONE HAMMER - LARGE	1
19	03435000030	8698673493513	WEDGE DOUBLE OSTEOTOME	1
20	08040000151	8698673494800	PLATE IMPACTOR	1
	00000805400	**8699931027938**	**OWO PLATE SCREW TRAY**	***1***
	00560270125	**8699931010923**	**CONTAINER 560X270X125 MM**	***1***

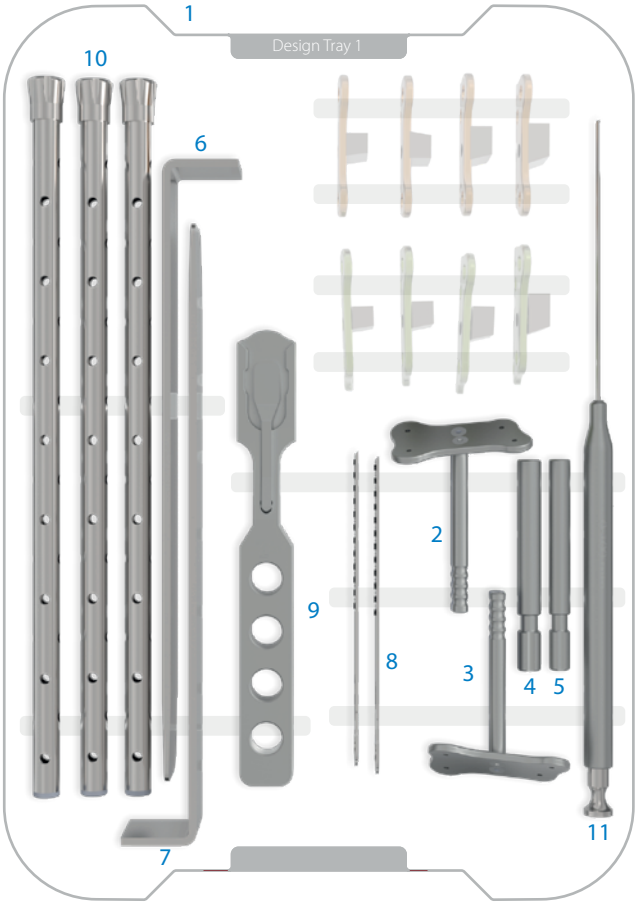

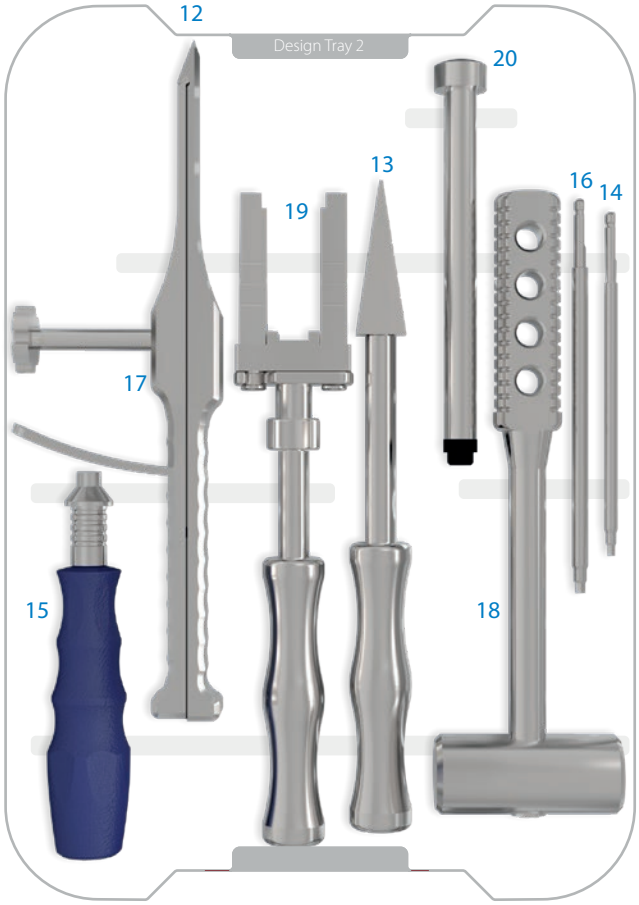

LW-12
MISS PROXIMAL TIBIA PLATES SET

MISS PROXIMAL TIBIA LATERAL PLATES

Indications: Split-type fractures of the lateral tibial plateau and lateral split fractures with associated depressions.

Plate Profile: Thickness: 4.0 mm, Width: 16.0 mm, Distance between holes: 14.0 mm..

TST Code	Barcode	Description	Side	Material	Length (mm)
35025710107	8698673444836	MISS LC PROXIMAL TIBIA LATERAL PLATE 7 HOLES	R	Ti	103
35025710109	8698673444843	MISS LC PROXIMAL TIBIA LATERAL PLATE 9 HOLES	R	Ti	133
35025710111	8698673438521	MISS LC PROXIMAL TIBIA LATERAL PLATE 11 HOLES	R	Ti	174
35025710113	8698673444850	MISS LC PROXIMAL TIBIA LATERAL PLATE 13 HOLES	R	Ti	215
35026710107	8698673444881	MISS LC PROXIMAL TIBIA LATERAL PLATE 7 HOLES	L	Ti	103
35026710109	8698673444898	MISS LC PROXIMAL TIBIA LATERAL PLATE 9 HOLES	L	Ti	133
35026710111	8698673444911	MISS LC PROXIMAL TIBIA LATERAL PLATE 11 HOLES	L	Ti	174
35026710113	8698673444935	MISS LC PROXIMAL TIBIA LATERAL PLATE 13 HOLES	L	Ti	215

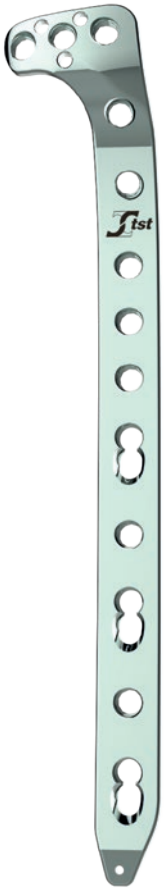

13 holes

Recommended Screws 5.0 mm Cortical, 5.0 mm Lock. Cortical, 5.5 mm Cancellous, 5.5 mm Lock. Cancellous

MISS PROXIMAL TIBIA MEDIAL PLATES

Indications: The plate is indicated for metaphyseal fractures of the medial tibial plateau and split-type fractures of the medial tibial plateau.

Plate Profile: Thickness: 4.0 mm, Width: 15.5 mm, Distance between holes: 15.0 mm.

TST Code	Barcode	Description	Side	Material	Length (mm)
35025710207	8698673446007	MISS LC PROX. TIBIA MEDIAL PLATE 7 HOLES	R	Ti	89
35025710209	8698673446014	MISS LC PROX. TIBIA MEDIAL PLATE 9 HOLES	R	Ti	117
35025710211	8698673446021	MISS LC PROX. TIBIA MEDIAL PLATE 11 HOLES	R	Ti	145
35025710213	8698673446038	MISS LC PROX. TIBIA MEDIAL PLATE 13 HOLES	R	Ti	185
35025710215	8698673440227	MISS LC PROX. TIBIA MEDIAL PLATE 15 HOLES	R	Ti	225
35026710207	8698673444973	MISS LC PROX. TIBIA MEDIAL PLATE 7 HOLES	L	Ti	89
35026710209	8698673446045	MISS LC PROX. TIBIA MEDIAL PLATE 9 HOLES	L	Ti	117
35026710211	8698673446052	MISS LC PROX. TIBIA MEDIAL PLATE 11 HOLES	L	Ti	145
35026710213	8698673446069	MISS LC PROX. TIBIA MEDIAL PLATE 13 HOLES	L	Ti	185
35026710215	8698673440234	MISS LC PROX. TIBIA MEDIAL PLATE 15 HOLES	L	Ti	225

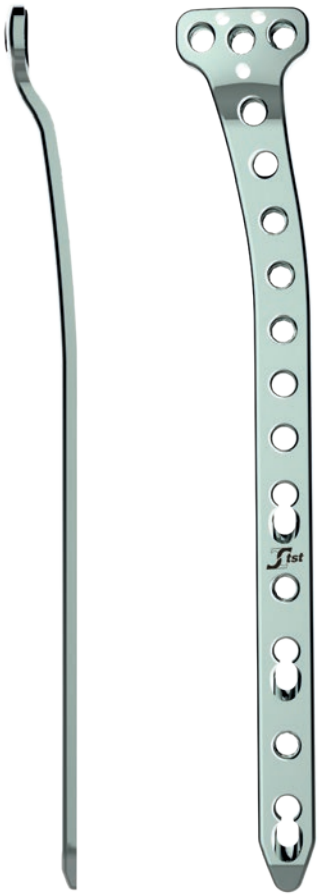

15 holes

Recommended Screws 5.0 mm Cortical, 5.0 mm Lock. Cortical, 5.5 mm Cancellous, 5.5 mm Lock. Cancellous

Screws

LOCKING CORTEX SCREW CONICAL HEAD SELFT Ti Ø 5 MM

TST Code	Barcode	Length	Qty
20127180050	8698673429604	18 mm	5
20127200050	8698673429611	20 mm	5
20127220050	8698673429628	22 mm	5
20127240050	8698673429635	24 mm	5
20127260050	8698673429642	26 mm	5
20127280050	8698673429659	28 mm	5
20127300050	8698673429666	30 mm	5
20127320050	8698673429673	32 mm	5
20127340050	8698673429680	34 mm	5
20127360050	8698673429697	36 mm	5
20127380050	8698673429703	38 mm	5
20127400050	8698673429710	40 mm	5
20127450050	8698673429727	45 mm	5
20127500050	8698673429734	50 mm	5
20127550050	8698673429741	55 mm	5
20127600050	8698673429758	60 mm	5
20127650050	8698673429765	65 mm	5
20127700050	8698673429772	70 mm	5

CORTEX SCREW CONICAL HEAD Ti Ø 5 MM

TST Code	Barcode	Length	Qty
20120180050	8698673429376	18 mm	4
20120200050	8698673429383	20 mm	4
20120220050	8698673429390	22 mm	4
20120240050	8698673429406	24 mm	4
20120260050	8698673429413	26 mm	4
20120280050	8698673429420	28 mm	4
20120300050	8698673429437	30 mm	4
20120320050	8698673429444	32 mm	4
20120340050	8698673429451	34 mm	4
20120360050	8698673429468	36 mm	4
20120380050	8698673429475	38 mm	4
20120400050	8698673429482	40 mm	4
20120450050	8698673429499	45 mm	4
20120500050	8698673429505	50 mm	4
20120550050	8698673429512	55 mm	4
20120600050	8698673429529	60 mm	4
20120650050	8698673429536	65 mm	4
20120700050	8698673429543	70 mm	4

CORTICO CANCELLOUS CONICAL HEAD SELFT Ti Ø 5.5 MM

TST Code	Barcode	Length	Qty
20120500055	8698673437883	50 mm	4
20120550055	8698673437890	55 mm	4
20120600055	8698673437906	60 mm	4
20120650055	8698673437913	65 mm	4
20120700055	8698673437920	70 mm	4
20120750055	8698673437937	75 mm	4
20120800055	8698673437944	80 mm	4
20120850055	8698673437951	85 mm	4
20120900055	8698673437968	90 mm	4
20120950055	8698673437975	95 mm	4
20120100055	8698673437982	100 mm	4
20120105055	8698673437999	105 mm	4

LOCK CORTICO CANCEL CONICAL HEAD SELFT Ti Ø 5.5 MM

TST Code	Barcode	Length	Qty
20127500055	8698673438194	50 mm	4
20127550055	8698673438200	55 mm	4
20127600055	8698673438217	60 mm	4
20127650055	8698673438224	65 mm	4
20127700055	8698673438231	70 mm	4
20127750055	8698673438248	75 mm	4
20127800055	8698673438255	80 mm	4
20127850055	8698673438262	85 mm	4
20127900055	8698673438279	90 mm	4
20127950055	8698673438286	95 mm	4
20127100055	8698673438149	100 mm	4
20127105055	8698673438156	105 mm	4

Plates & Instruments

No	TST Code	Barcode	Description	Quantity
1	00000205100	8699931023473	MISS TIBIA 1. DESIGN TRAY	1
	35025710107	8698673444836	MISS LC PROXIMAL TIBIA LATERAL PLATE R (7, 9, 11, 13 HOLES)	4
	35026710107	8698673444881	MISS LC PROXIMAL TIBIA LATERAL PLATE L (7, 9, 11, 13 HOLES)	4
2	03501510001	8698673440364	MISS PROXIMAL TIBIA LATERAL GUIDE - R	1
3	03501610001	8698673440371	MISS PROXIMAL TIBIA LATERAL GUIDE - L	1
4	00000205200	8699931023480	MISS TIBIA 2. DESIGN TRAY	1
	35025710207	8698673446007	MISS LC PROXIMAL TIBIA MEDIAL PLATE R (7, 9, 11, 13, 15 HOLES)	5
	35026710207	8698673444973	MISS LC PROXIMAL TIBIA MEDIAL PLATE L (7, 9, 11, 13, 15 HOLES)	5
5	03501500001	8698673441064	MISS PROXIMAL TIBIA MEDIAL GUIDE - R	1
6	03501600001	8698673440302	MISS PROXIMAL TIBIA MEDIAL GUIDE - L	1

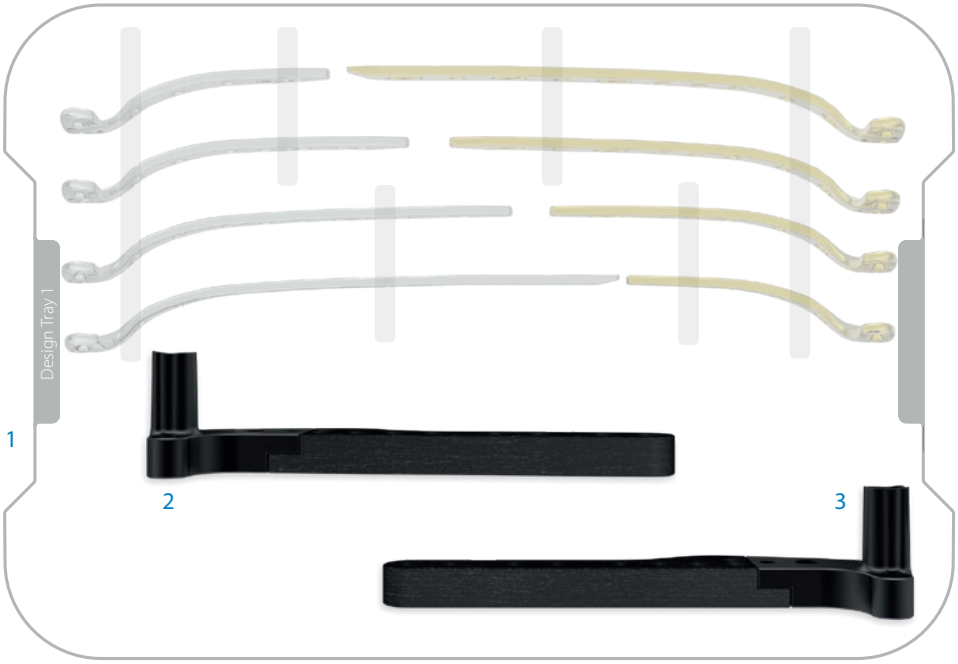

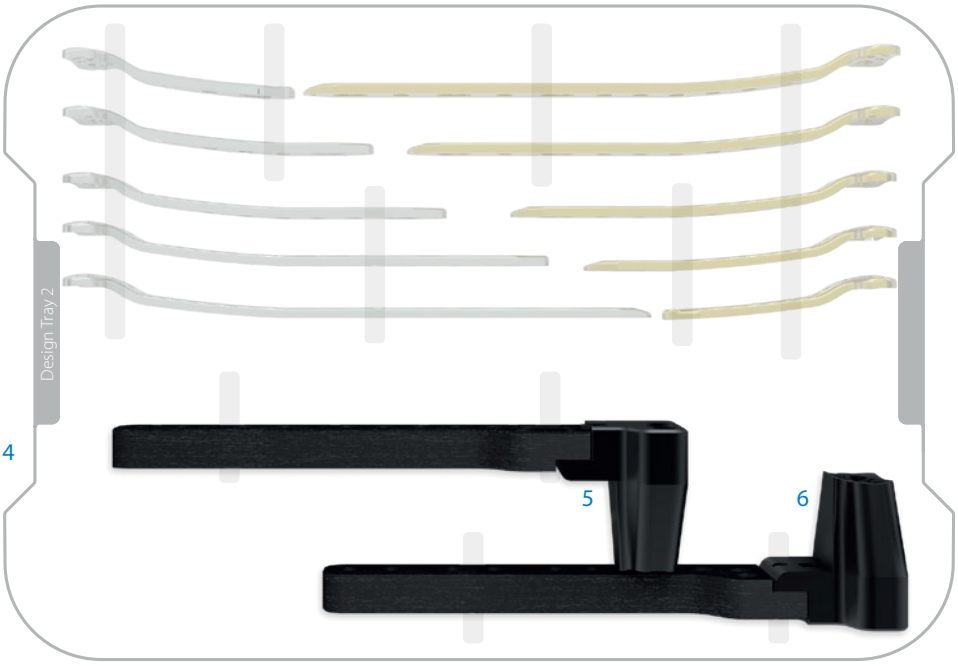

Plates & Instruments

No	TST Code	Barcode	Description	Quantity
7	00000205400	8699931023503	MISS TIBIA 4. DESIGN TRAY	1
8	03501000005	8698673440333	MISS PROXIMAL TIBIA GUIDE LOCKING DEVICE	2
9	04050000008	8699931028379	WRENCH Ø 8 MM	1
10	03501000006	8698673440340	MISS PROXIMAL TIBIA REDUCTION DEVICE	1
11	02000415035	8699931029260	SCREW DRIVER QUICK HEX. TIP Ø 3.5X150 MM	1
12	02020220035	8699931023442	SCREW DRIVER QUICK HEX. TIP Ø 3.5X 220 MM	1
13	01191000040	8699931008739	SCREW DRIVER TORQUE 3NM	1
14	02010101002	8698673493308	SOFT SCREW DRIVER QUICK LARGE	1
15	03501000003	8698673440319	MISS PROXIMAL TIBIA DRILL SLEEVE Ø 4.2 MM	2
16	03501000004	8698673440326	MISS PROXIMAL TIBIA SCREW SLEEVE	2
17	03605000130	8699931027921	TROCAR Ø6.5 X 130 MM	1
18	03501000002	8699931019056	MISS PROXIMAL TIBIA K-WIRE SLEEVE Ø2 MM	1
19	23410250120	8698673453128	KIRSCHNER WIRE TROCAR POINT 2X250 MM	5
19	04551000260	8699931030693	K-WIRE TUBE Ø10XØ8X260 MM	1
20	03501000008	8699931030280	D.GAUGE-MISS PROX TIBIA&SHAFT PLATE-THROUGH SLEEVE	1
21	22314025042	8680858429561	BONE DRILL 4.2X40X250 MM	2
22	02006000100	8680858410972	DEPTH GAUGE - MISS LOWER EXT. OVER PLATE	1
23	03501000042	8699931011005	CONIC THR.DRILL SLEEVE 4.2MM	2
	00000205500	8699931023510	MISS FEMUR-TIBIA SCREW DESIGN TRAY	1
	00560270170	8699931010787	CONTAINER 560X270X170 MM	1

Instruments

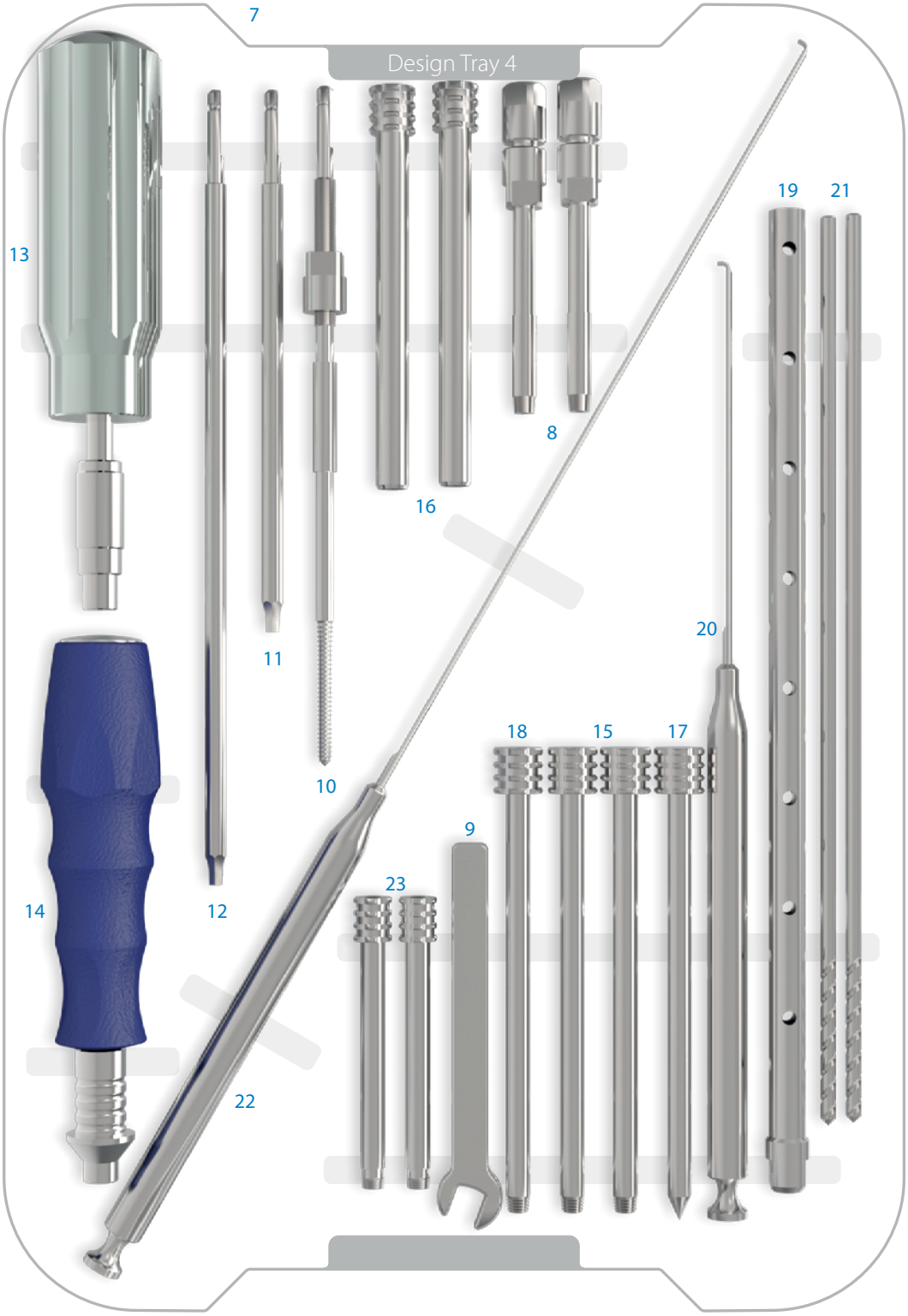

LW-22 ANKLE PLATES SET

MISS LC DISTAL TIBIA MEDIAL PLATES

Indications: Intra and extra-articular fractures and osteotomies of the distal tibia.

Plate Profile: Thickness: 4.0 mm, Width: 11.0 mm, Distance between holes: 13.0 mm

TST Code	Barcode	Description	Side	Material	Length (mm)
34925710213	8698673436718	MISS LC DISTAL TIBIA MEDIAL PLATE 13 HOLE	R	Ti	126
34925710215	8698673429086	MISS LC DISTAL TIBIA MEDIAL PLATE 15 HOLE	R	Ti	152
34925710217	8698673429093	MISS LC DISTAL TIBIA MEDIAL PLATE 17 HOLE	R	Ti	178
34925710219	8698673429109	MISS LC DISTAL TIBIA MEDIAL PLATE 19 HOLE	R	Ti	204
34925710221	8698673429116	MISS LC DISTAL TIBIA MEDIAL PLATE 21 HOLE	R	Ti	227
34926710213	8698673436701	MISS LC DISTAL TIBIA MEDIAL PLATE 13 HOLE	L	Ti	126
34926710215	8698673429123	MISS LC DISTAL TIBIA MEDIAL PLATE 15 HOLE	L	Ti	152
34926710217	8698673429130	MISS LC DISTAL TIBIA MEDIAL PLATE 17 HOLE	L	Ti	178
34926710219	8698673429147	MISS LC DISTAL TIBIA MEDIAL PLATE 19 HOLE	L	Ti	204
34926710221	8698673429154	MISS LC DISTAL TIBIA MEDIAL PLATE 21 HOLE	L	Ti	227

21 holes

Recommended Screw 3.5 mm Cortical, 3.5 mm Lock. Cortical, 4.0 mm Cancellous, 4.0 mm Lock. Cancellous

DISTAL TIBIA ANTERIOR LATERAL PLATES

Indications: Fractures, osteotomies and nonunions of the distal tibia and also particularly in osteopenic bone.

Plate Profile: Thickness: 3.0 mm, Width: 12.0 mm.

TST Code	Barcode	Description	Material	Length (mm)
34925710307	8699931002751	DISTAL TIBIA ANTERIO LATERAL PLATE 7 HOLES	Ti	95
34925710309	8699931002768	DISTAL TIBIA ANTERIO LATERAL PLATE 9 HOLES	Ti	124
34925710311	8699931002775	DISTAL TIBIA ANTERIO LATERAL PLATE 11 HOLES	Ti	152
34925710313	8699931002782	DISTAL TIBIA ANTERIO LATERAL PLATE 13 HOLES	Ti	180
34926710307	8699931002669	DISTAL TIBIA ANTERIO LATERAL PLATE 7 HOLES	Ti	95
34926710309	8699931002676	DISTAL TIBIA ANTERIO LATERAL PLATE 9 HOLES	Ti	124
34926710311	8699931002683	DISTAL TIBIA ANTERIO LATERAL PLATE 11 HOLES	Ti	152
34926710313	8699931002690	DISTAL TIBIA ANTERIO LATERAL PLATE 13 HOLES	Ti	180

7 holes

Recommended Screw 3.5 mm Cortical, 3.5 mm Lock. Cortical, 4.0 mm Cancellous, 4.0 mm Lock. Cancellous

DISTAL TIBIA POSTERIOR PLATES

Indications: For medial buttressing of comminuted distal tibial fractures and for comminuted humeral head fractures.

Plate Profile: Thickness: 3.0 mm, Width: 10.0 mm.

TST Code	Barcode	Description	Material	Length (mm)
34920000007	8680858405114	LC DISTAL TIBIA POSTERIOR PLATE 7 HOLES	Ti	76

Recommended Screw 3.5 mm Cortical, 3.5 mm Lock. Cortical, 4.0 mm Cancellous, 4.0 mm Lock. Cancellous

PILON PLATES

Indications: Extra-articular, intra-articular fractures and osteotomies of the distal tibia.

Plate Profile: Thickness: 3.0 mm, Width: 10.0 mm, Distance between holes: 12.0 mm.

TST Code	Barcode	Description	Material	Length (mm)
37420700007	8698673463349	LCP PILON PLATE LOCK TI 7 HOLES	Ti	143
37420700009	8698673463356	LCP PILON PLATE LOCK TI 9 HOLES	Ti	167
36620700211	8698673463806	DISTAL TIBIA LOCK. MEDIAL MALLEOLAR PLATE LONG	Ti	125
36620700209	8698673423091	DISTAL TIBIA LOCK. MEDIAL MALLEOLAR PLATE SHORT	Ti	143
36720700317	8698673428287	DISTAL TIBIA LOCK. ANTERIOR MALLEOLAR PLATE LONG	Ti	77
36720700308	8698673423107	DISTAL TIBIA LOCK. ANTERIOR MALLEOLAR PLATE SHORT	Ti	100

Recommended Screw 3.5 mm Cortical, 3.5 mm Lock. Cortical, 4.0 mm Cancellous, 4.0 mm Lock. Cancellous

DISTAL FIBULA PLATES

Indications: Distal Fibula Locking Plates are intended for fixation of fractures, osteotomies and nonunions of the metaphyseal and diaphyseal region of the distal fibula.

Plate Profile: Thickness: 2.0 mm, Width: 10.5 mm, Distance between holes: 11.0 mm.

TST Code	Barcode	Description	Side	Material	Length (mm)
36525700008	8698673478022	LOW PROFILE DISTAL FIBULA LOCK.PLATE 8 HOLES	R	Ti	72
36525700010	8698673425804	LOW PROFILE DISTAL FIBULA LOCK.PLATE 10 HOLES	R	Ti	93
36525700012	8698673426771	LOW PROFILE DISTAL FIBULA LOCK.PLATE 12 HOLES	R	Ti	115
36526700008	8698673422438	LOW PROFILE DISTAL FIBULA LOCK.PLATE 8 HOLES	L	Ti	72
36526700010	8698673425927	LOW PROFILE DISTAL FIBULA LOCK.PLATE 10 HOLES	L	Ti	93
36526700012	8698673426764	LOW PROFILE DISTAL FIBULA LOCK.PLATE 12 HOLES	L	Ti	115

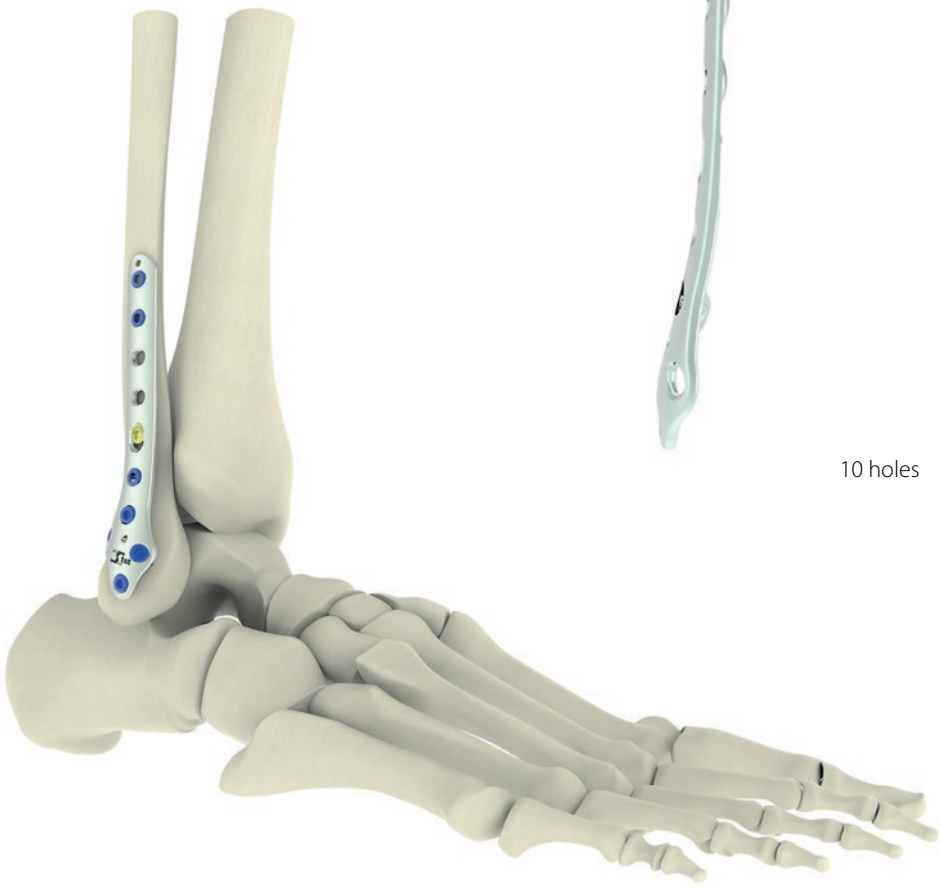

10 holes

Recommended Screw 3.5 mm Cortical, 3.5 mm Lock. Cortical, 4.0 mm Cancellous, 4.0 mm Lock. Cancellous

ANATOMIC DISTAL FIBULA LOCKING PLATE

Indications: Anatomic Distal Fibula Locking Plates are indicated for fractures, osteotomies, and nonunions of the metaphyseal and diaphyseal region of the distal fibula.

Plate Profile: Thickness: 2.2 mm, Width: 11.0 mm, Distance between holes: 11.0 mm.

Distal holes of the plate 2.7 mm locking screws to provide multiple screw options. Holes in shaft accept 3.5 mm locking and usual screws and 4.0 mm cancellous bone screws.

TST Code	Barcode	Description	Side	Material
39325710008	8699931002478	ANATOMIC DIST.FIBULA LOCK. PLATE 15 HOLE	R	Ti
39325710010	8699931002485	ANATOMIC DIST.FIBULA LOCK. PLATE 17 HOLE	R	Ti
39325710012	8699931002492	ANATOMIC DIST.FIBULA LOCK. PLATE 19 HOLE	R	Ti
39326710008	8699931002515	ANATOMIC DIST.FIBULA LOCK. PLATE 15 HOLE	L	Ti
39326710010	8699931002522	ANATOMIC DIST.FIBULA LOCK. PLATE 17 HOLE	L	Ti
39326710012	8699931002539	ANATOMIC DIST.FIBULA LOCK. PLATE 19 HOLE	L	Ti

Recommended Screw 2.7 mm Small Head, 2.7 mm Small Head Lock., 3.5 mm Cortical, 3.5 mm Lock. Cortical, 4.0 mm Cancellous, 4.0 mm Lock. Cancellous

CALCANEUS PLATES

Indications: Complicated calcaneal fractures, calcaneal osteotomies and severely comminuted fractures.

Plate Profile: Thickness 1.2 mm

TST Code	Barcode	Description	Material	Length (mm)
35125010000	8698673418622	LOWPROFILE CALCANEUS INTERLOCK. PLATE SHORT	Ti	58
35125020000	8698673418646	LOWPROFILE CALCANEUS INTERLOCK. PLATE STANDARD	Ti	67
35125030000	8698673418608	LOWPROFILE CALCANEUS INTERLOCK. PLATE LONG	Ti	75

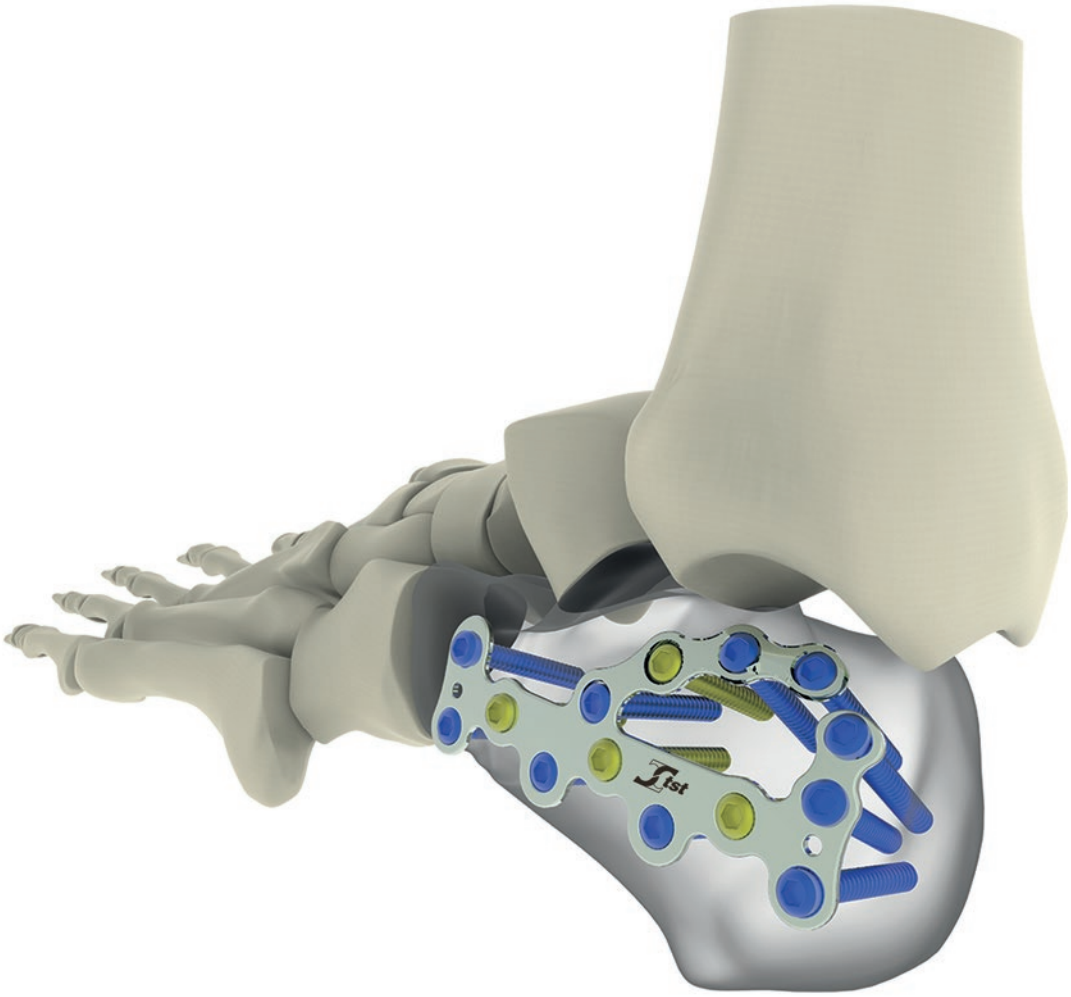

Recommended Screw 3.5 mm Cortical, 3.5 mm Lock. Cortical, 4.0 mm Cancellous, 4.0 mm Lock. Cancellous

LW-22 Ankle Plates Set

PROXIMAL TIBIA POSTERIOMEDIAL PLATES*

Indications: Internal fixation of posteromedial proximal tibia fractures including buttressing of fractures of the proximal and metaphyseal areas of the tibia.

Plate Profile: Thickness: 3.0 mm, Width: 13.0 mm, Distance between holes: 10.0 mm

TST Code	Barcode	Description	Material	Length (mm)
35220710208	8680858424467	LC PROX. TIBIA POSTERIOMEDIAL T PLATE 8 H	Ti	65
35220710209	8680858424474	LC PROX. TIBIA POSTERIOMEDIAL T PLATE 9 H	Ti	75

8 holes

Recommended Screw 3.5 mm Cortical, 3.5 mm Lock. Cortical, 4.0 mm Cancellous, 4.0 mm Lock. Cancellous

Screws

SMALL HEAD SCREW Ti Ø 2.7 MM

TST Code	Barcode	Length	Qty
24620120027	8699931006841	12	1
24620140027	8699931006834	14	1
24620160027	8699931006827	16	1
24620180027	8699931006810	18	1
24620200027	8699931006803	20	1
24620220027	8699931006797	22	1
24620240027	8699931006162	24	1
24620260027	8699931006155	26	1
24620280027	8699931006148	28	1
24620300027	8699931006131	30	1
24620320027	8699931006124	32	1
24620340027	8699931006117	34	1
24620360027	8699931006100	36	1
24620380027	8699931006094	38	1
24620400027	8699931006087	40	1

LOW PROF. CORT. SELFT SCREW Ti Ø 3.5 MM

TST Code	Barcode	Length	Qty
20120120035	8698673417076	12	3
20120140035	8698673417083	14	3
20120160035	8698673417090	16	6
20120180035	8698673417106	18	6
20120200035	8698673417113	20	6
20120220035	8698673417120	22	3
20120240035	8698673417137	24	3
20120260035	8698673417144	26	3
20120280035	8698673417151	28	3
20120300035	8698673417168	30	3
20120320035	8698673417175	32	3
20120340035	8698673417182	34	3
20120360035	8698673417199	36	3
20120380035	8698673417205	38	3
20120400035	8698673417212	40	3
20120420035	8698673417229	42	3
20120440035	8698673417236	44	3
20120460035	8698673417243	46	3
20120480035	8698673417250	48	3
20120500035	8698673417267	50	3
20120550035	8698673477216	55	3
20120600035	8698673426238	60	3

LOWPROF. CANCELLOUS SCREW (FULL THREAD) Ti Ø 4 MM

TST Code	Barcode	Length	Qty
20420160040	8698673422599	16	2
20420180040	8698673422605	18	2
20420200040	8698673422612	20	2
20420220040	8698673422629	22	2
20420240040	8698673422636	24	2
20420260040	8698673426993	26	2
20420280040	8698673422650	28	2
20420300040	8698673422667	30	2
20420350040	8698673422674	35	4
20420400040	8698673422681	40	4
20420450040	8698673422698	45	4
20420500040	8698673422704	50	4
20420550040	8698673434394	55	4
20420600040	8698673444140	60	4

MALLEOLAR SCREW Ti Ø 4 MM

TST Code	Barcode	Length	Qty
20320735040	8698673429925	35	2
20320740040	8698673429932	40	2
20320745040	8698673429949	45	2
20320750040	8698673429956	50	2
20320755040	8698673429963	55	2
20320760040	8698673429970	60	2
20320765040	8698673429987	65	2
20320770040	8698673429994	70	2

SMALL HEAD LOCK.SCREW Ti Ø 2.7 MM

TST Code	Barcode	Length	Qty
24627120027	8699931007220	12	3
24627140027	8699931007213	14	3
24627160027	8699931007206	16	3
24627180027	8699931007190	18	3
24627200027	8699931007183	20	3
24627220027	8699931007176	22	3
24627240027	8699931005912	24	3
24627260027	8699931005929	26	3
24627280027	8699931005936	28	3
24627300027	8699931005943	30	3
24627320027	8699931005950	32	3
24627340027	8699931005967	34	3
24627360027	8699931005974	36	3
24627380027	8699931005981	38	3
24627400027	8699931005998	40	3

LOW PROF. CORT. LOCK. SCREW SELFT Ti Ø 3.5 MM

TST Code	Barcode	Length	Qty
20127120035	8698673417571	12	5
20127140035	8698673417588	14	5
20127160035	8698673417595	16	10
20127180035	8698673417601	18	10
20127200035	8698673417618	20	10
20127220035	8698673417625	22	5
20127240035	8698673417632	24	5
20127260035	8698673417649	26	5
20127280035	8698673417656	28	5
20127300035	8698673417663	30	5
20127320035	8698673417670	32	5
20127340035	8698673417687	34	5
20127360035	8698673417694	36	5
20127380035	8698673417700	38	5
20127400035	8698673417717	40	5
20127420035	8698673417724	42	5
20127440035	8698673417731	44	5
20127460035	8698673417748	46	5
20127480035	8698673417755	48	5
20127500035	8698673417762	50	5
20127550035	8698673445895	55	5
20127600035	8698673439306	60	5

LOW PROF. CANCEL. LOCK. SCREW SELFT Ti Ø 4 MM

TST Code	Barcode	Length	Qty
20427140040	8698673416826	14	4
20427160040	8698673416833	16	4
20427180040	8698673416840	18	4
20427200040	8698673416857	20	4
20427220040	8698673416864	22	4
20427240040	8698673416871	24	4
20427260040	8698673416888	26	4
20427280040	8698673416895	28	4
20427300040	8698673416901	30	4
20427350040	8698673416918	35	8
20427400040	8698673416925	40	8
20427450040	8698673416932	45	8
20427500040	8698673416949	50	8
20427550040	8698673476639	55	8
20427600040	8698673476646	60	4

SCREW WASHER Ti Ø 10 MM

TST Code	Barcode	Diameter	Qty
20820000010	8698673434875	10	5

Plates & Instruments

No	TST Code	Barcode	Description	Qty
1	00000401210	8680858425204	ANKLE PLATE 1. DESIGN TRAY	1
	34925710213	8698673436718	MISS LC DISTAL TIBIA MEDIAL PLATE R (13,15,17,19,21 HOLES)	5
	34926710213	8698673436701	MISS LC DISTAL TIBIA MEDIAL PLATE L (13,15,17,19,21 HOLES)	5
2	03496000001	8699931017960	MISS DISTAL TIBIA MEDIAL GUIDE L	1
3	03495000001	8699931017953	MISS DISTAL TIBIA MEDIAL GUIDE R	1
4	03490000004	8698673465190	MISS DISTAL TIBIA GUIDE LOCKING DEVICE	1
5	03490000001	8698673465169	MISS DISTAL TIBIA DRILL SLEEVE Ø 2.2 MM	1
6	03490000003	8698673465183	MISS DISTAL TIBIA DRILL SLEEVE Ø 2.7 MM	1
7	03665011005	8680858408405	TROCAR Ø 5.0 X 110 MM	1
8	03490000009	8698673465244	MISS DISTAL TIBIA SCREW SLEEVE	2
9	03490000007	8698673465220	MISS DISTAL TIBIA REDUCTION DEVICE	1
10	04050000008	8699931028379	WRENCH Ø 8 MM	1
11	03490000008	8698673465237	D.GAUGE-MISS DIST.TIBIA MED.PLATE-THROUGH SLEEVE	1
	00000401220	8680858425211	ANKLE PLATE 2. DESIGN TRAY	1
	36525700008	8698673478022	LOW PROFILE DISTAL FIBULA LOCK.PLATE R (8,10,12 HOLES)	3
	36526700008	8698673422438	LOW PROFILE DISTAL FIBULA LOCK.PLATE L (8,10,12 HOLES)	3
	34827000005	8698673418882	LOW PROF 1\3 RADIUS ULNA I.L.PLATE (4,5,6,7,8,9,10,12 HOLES)	8
	39325710008	8699931002478	ANATOMIC DIST.FIBULA LOCK. PLATE RIGHT (15, 17, 19 HOLES)	3
	39326710008	8699931002515	ANATOMIC DIST.FIBULA LOCK. PLATE LEFT (15, 17, 19 HOLES)	3
	34827100005	8698673422988	LOW PROF ULNA RADIUS I.LOCK PLATE (4,5,6,7,8,9,10,12 HOLES)	8
	37420700009	8698673463356	LCP PILON PLATE LOCK TI 9 HOLES	1
	37420700007	8698673463349	LCP PILON PLATE LOCK TI 7 HOLES	1
	36620700211	8698673463806	DISTAL TIBIA LOCK. MEDIAL MALLEOLAR PLATE LONG	1
	36620700209	8698673423091	DISTAL TIBIA LOCK. MEDIAL MALLEOLAR PLATE SHORT	1
	36720700317	8698673428287	DISTAL TIBIA LOCK. ANTERIOR MALLEOLAR PLATE LONG	1
	36720700308	8698673423107	DISTAL TIBIA LOCK. ANTERIOR MALLEOLAR PLATE SHORT	1
	00000401230	8680858425228	ANKLE PLATE 3. DESIGN TRAY	1
	34925710307	8699931002751	DISTAL TIBIA ANTERIO LATERAL PLATE R (7,9,11,13 HOLES)	4
	34926710307	8699931002669	DISTAL TIBIA ANTERIO LATERAL PLATE L (7,9,11,13 HOLES)	4
	35125010000	8698673418622	LOWPROFILE CALCANEUS INTERLOCK. PLATE (SHORT, STANDARD , LONG)	3
	34920000007	8680858405114	LC DISTAL TIBIA POSTERIOR PLATE TI 7 HOLES	2

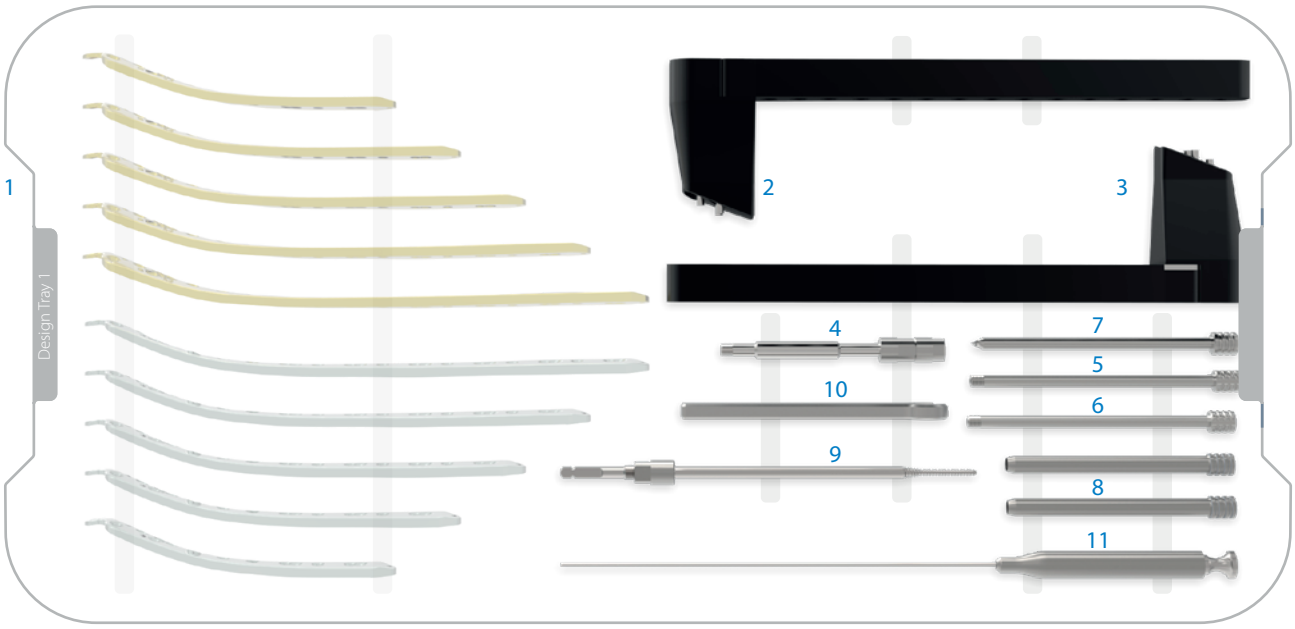

Plates & Instruments

No	TST Code	Barcode	Description	Qty
12	00000401240	8680858425235	ANKLE PLATE 4. DESIGN TRAY	1
13	02006000700	8680858410965	DEPTH GAUGE - UPPER EXT. PLATE (2.7 MM)	1
14	02005000700	8699931028874	DEPTH GAUGE - UPPER EXT. PLATE (3.5 MM & 4.0 MM)	1
15	02005100014	8699931021844	DRILL GUIDE DOUBLE UPPER EXTREMITY	1
16	02052000020	8699931017588	MODULAR DRILL SLEEVE Ø2 MM	1
17	02052000027	8699931017595	MODULAR DRILL SLEEVE Ø2.7 MM	1
18	02052000032	8699931017601	MODULAR DRILL SLEEVE Ø3.2 MM	1
19	02005100027	8698673490819	THREADED DRILL GUIDE Ø2.7 MM	2
20	02005100037	8698673447646	THREADED DRILL GUIDE Ø3.2 MM	2
21	02005805020	8680858425730	THREADED DRILL SLEEVE Ø 2X50 MM FOR SMALL HEAD SCR	2
22	22310130020	8698673450400	BONE DRILL 2.0X130 MM	2
23	22310200027	8698673450431	BONE DRILL 2.7X200 MM	1
24	22310130027	8698673450424	BONE DRILL 2.7 X 130 MM	1
25	22310130032	8699931029932	BONE DRILL 3.2 X 130 MM	2
26	02083000002	8699931029222	SMALL SHARP HOOK	1
27	02010101001	8698673441187	SOFT SCREW DRIVER QUICK SMALL	1
28	02020103025	8699931010930	SCREW DRIVER QUICK TIP 2.5XØ5X130 MM	2
29	02000480017	8699931029253	SCREW DRIVER QUICK HEX. TIP Ø 1.7X80 MM	1
30	01191000015	8699931008722	SCREW DRIVER TORQUE 1.5NM	1
31	04551000160	8699931028805	K-WIRE TUBE Ø10XØ8X160 MM	1
31	04551008190	8699931036756	K-WIRE TUBE Ø10XØ8X190 MM	1
31	23412150015	8698673452626	KIRSCHNER WIRE TREADED POINT 1.5X150 MM	2
31	23410180015	8698673458086	KIRSCHNER WIRE TROCAR POINT 1.5X180 MM	2
31	23410120150	8698673452978	KIRSCHNER WIRE TROCAR POINT 1.5X120 MM	4
	00000301600	8699931010824	UPPER EXTREMITY - ANKLE SCREW TRAY	1
	00560270180	8699931023152	CONTAINER 560X270X180 MM	1

Instruments

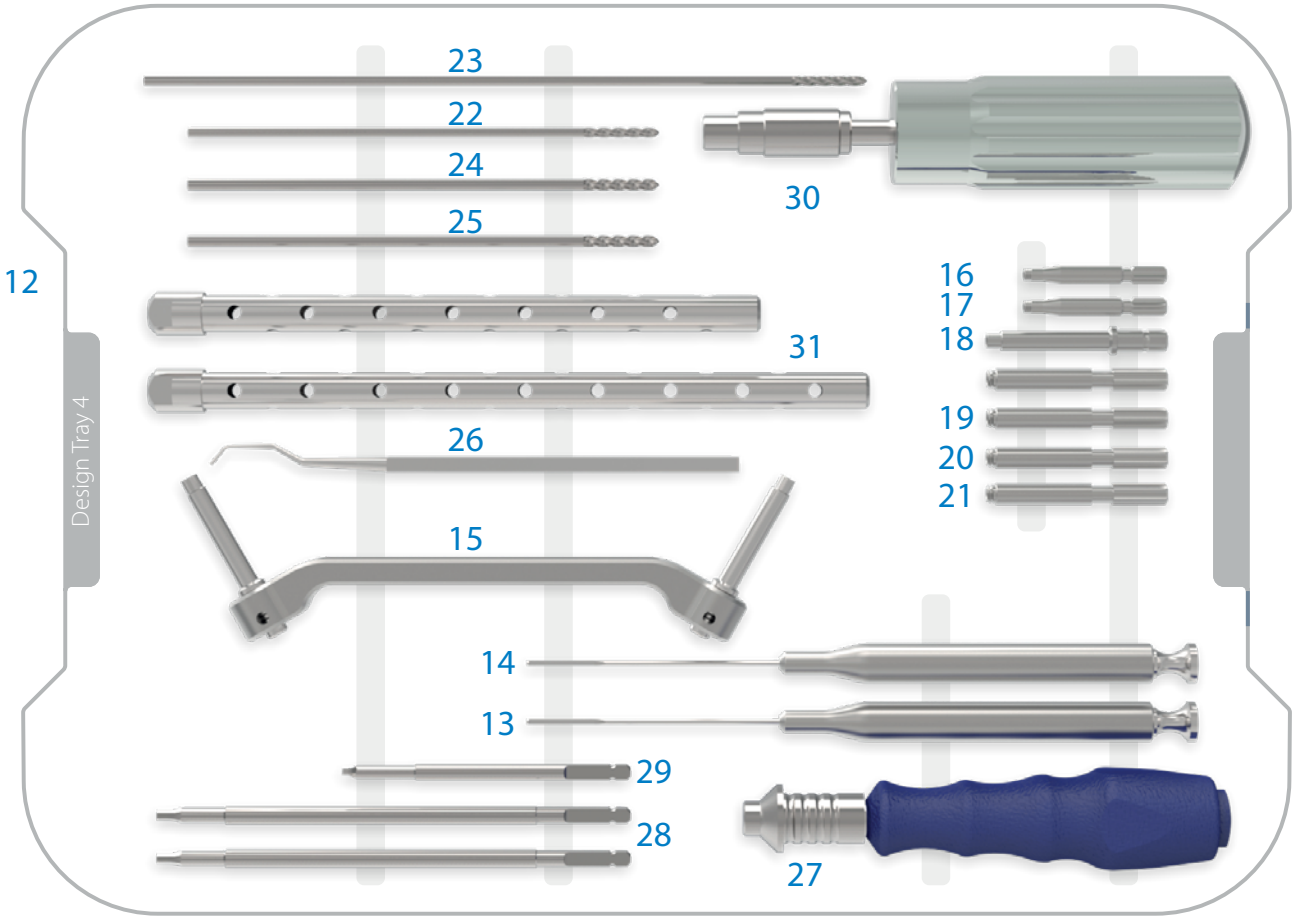

UP-12
LC MINI FRAGMENT PLATES SET

UP-12 LC Mini Fragment Plates Set

LC MINI FRAGMENT PLATES Ti

The Mini Fragment Plate set is a special set consisting of plates and screws in low-profile structure. It is designed in different shapes which is compatible with the anatomical structure of the region. It is used for fusion, osteotomy and fracture fixation in orthopedic foot surgery and can also be used in hand and wrist surgery.

The set consists of LC plates and screws which are designed respectively in different profiles and the sizes are 2.0 mm, 2.4 mm and 2.7 mm.

Indications: Mini Fragment Plate system is intended for fixation of fractures, osteotomies, nonunions, replantations, and fusions of small bones, small bone fragments and particularly in osteopenic bone.

TST Code	Barcode	Description	Qty
00000100201	8699931021448	2.0 MM LC MINI FRAGMENT PLATE BOX	1
36020200004	8699931018837	2 MM LC MINI FRAGMENT STRAIGHT PLATE 4 HOLES	2
36020200006	8699931018820	2 MM LC MINI FRAGMENT STRAIGHT PLATE 6 HOLES	2
36020200008	8699931018813	2 MM LC MINI FRAGMENT STRAIGHT PLATE 8 HOLES	2
36020201006	8699931018868	2 MM LC MINI FRAGMENT ADAPTION PLATE 6 HOLES	2
36020201012	8699931018875	2 MM LC MINI FRAGMENT ADAPTION PLATE 12 HOLES	2
36020202007	8699931018851	2 MM LC MINI FRAGMENT CONDYLAR PLATE 7 HOLES	2
36020203037	8699931018806	2 MM LC MINI FRAGMENT Y-PLATE 3+7 HOLES	2
00000100241	8699931021431	2.4 MM LC MINI FRAGMENT PLATE BOX	1
36020240004	8699931018752	2.4 MM LC MINI FRAGMENT STRAIGHT PLATE 4 HOLES	2
36020240006	8699931018745	2.4 MM LC MINI FRAGMENT STRAIGHT PLATE 6 HOLES	2
36020240008	8699931018738	2.4 MM LC MINI FRAGMENT STRAIGHT PLATE 8 HOLES	2
36020241006	8699931018783	2.4 MM LC MINI FRAGMENT ADAPTION PLATE 6 HOLES	2
36020241012	8699931018790	2.4 MM LC MINI FRAGMENT ADAPTION PLATE 12 HOLES	2
36020242007	8699931018776	2.4 MM LC MINI FRAGMENT CONDYLAR PLATE 7 HOLES	2
36020243047	8699931018721	2.4 MM LC MINI FRAGMENT Y-PLATE 4+7 HOLES	2
36020244000	8699931019124	2.4 MM LC MINI FRAGMENT X-PLATE	2
36020244100	8699931020397	2.4 MM LC MINI FRAGMENT X-PLATE (SMALL)	2
36020275007	8699931018592	2.7 MM MINI MULTIFRAGMENT PLATE 7 HOLES	2
00000100271	8699931021424	2.7 MM LC MINI FRAGMENT PLATE BOX	1
36020270004	8699931018639	2.7 MM LC MINI FRAGMENT STRAIGHT PLATE 4 HOLES	2
36020270006	8699931018622	2.7 MM LC MINI FRAGMENT STRAIGHT PLATE 6 HOLES	2
36020270008	8699931018615	2.7 MM LC MINI FRAGMENT STRAIGHT PLATE 8 HOLES	2
36020271006	8699931018707	2.7 MM LC MINI FRAGMENT ADAPTION PLATE 6 HOLES	2
36020271012	8699931018714	2.7 MM LC MINI FRAGMENT ADAPTION PLATE 12 HOLES	2
36020272007	8699931018691	2.7 MM LC MINI FRAGMENT CONDYLAR PLATE 7 HOLES	2
36025273023	8699931018653	2.7 MM LC MINI FRAGMENT L-PLATE 2+3 HOLES RIGHT	2
36026273023	8699931018660	2.7 MM LC MINI FRAGMENT L-PLATE 2+3 HOLES LEFT	2
36025274023	8699931018677	2.7 MM LC MINI FRAGMENT L-PLATE (OBLIQUE) R 2+3 H	2
36026274023	8699931018684	2.7 MM LC MINI FRAGMENT L-PLATE (OBLIQUE) L 2+3 H	2

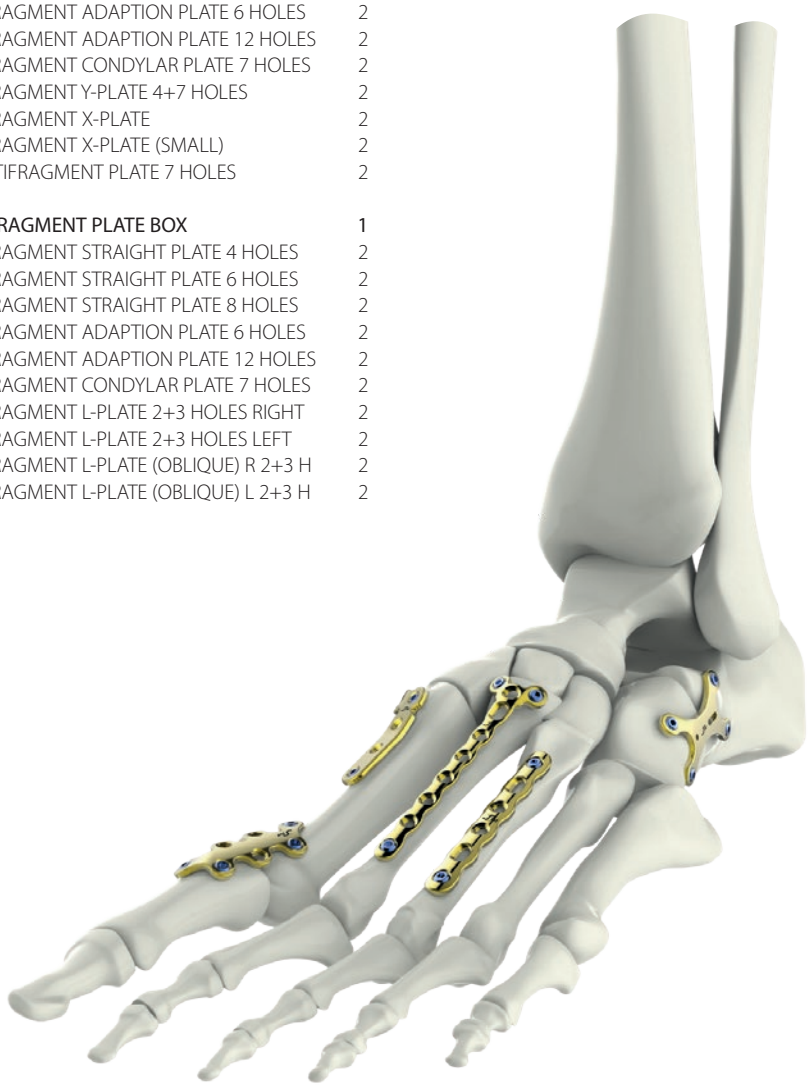

2.0 mm LC Mini Fragment Plates

2.0 MM ADAPTION PLATE 6 HOLES

2.0 MM ADAPTION PLATE 12 HOLES

2.0 MM STRAIGHT PLATE 8 HOLES

2.0 MM Y-PLATE 3+7 HOLES

2.0 MM STRAIGHT PLATE 6 HOLES

2.0 MM STRAIGHT PLATE 4 HOLES

2.0 MM CONDYLAR PLATE 7 HOLES

2.4 mm LC Mini Fragment Plates

2.4 MM ADAPTION PLATE 6 HOLES

2.4 MM Y-PLATE 4+7 HOLES

2.4 MM X-PLATE (SMALL)

2.4 MM ADAPTION PLATE 12 HOLES

2.4 MM STRAIGHT PLATE 8 HOLES

2.7 MM MULTIFRAGMENT PLATE 7 HOLES

2.4 MM STRAIGHT PLATE 6 HOLES

2.4 MM X-PLATE

2.4 MM STRAIGHT PLATE 4 HOLES

2.4 MM CONDYLAR PLATE 7 HOLES

2.7 mm LC Mini Fragment Plates

2.7 MM ADAPTION PLATE 6 HOLES

2.7 MM L-PLATE 2+3 HOLES RIGHT

2.7 MM ADAPTION PLATE 12 HOLES

2.7 MM L-PLATE 2+3 HOLES LEFT

2.7 MM STRAIGHT PLATE 8 HOLES

2.7 MM L-PLATE (OBLIQUE) L 2+3 H

2.7 MM STRAIGHT PLATE 6 HOLES

2.7 MM L-PLATE (OBLIQUE) R 2+3 H

2.7 MM STRAIGHT PLATE 4 HOLES

2.7 MM CONDYLAR PLATE 7 HOLES

Screws

Types of the Screws; Locking and non-locking screws of 2.0 mm, 2.4 mm and 2.7 mm in diameters are available according to the requirements. The head structure of the screw is in the form of low profile and compatible with a hexagonal tip screwdriver.

2.0 MM LC MINI FRAGMENT SCREWS

SMALL HEAD SCREW Ti Ø 2.0 MM

TST Code	Barcode	Length	Qty
24628100020	8699931015690	10	4
24628110020	8699931015423	11	4
24628120020	8699931015416	12	4
24628130020	8699931015409	13	4
24628140020	8699931015393	14	4
24628160020	8699931015386	16	4
24628180020	8699931015379	18	4
24628200020	8699931015362	20	4
24628220020	8699931015355	22	4
24628240020	8699931015348	24	4
24628260020	8699931015331	26	4

SMALL HEAD LOCK. SCREW Ti Ø 2.0 MM

TST Code	Barcode	Length	Qty
24627100020	8699931013160	10	5
24627110020	8699931015706	11	5
24627120020	8699931013184	12	5
24627130020	8699931015683	13	5
24627140020	8699931013191	14	5
24627160020	8699931013207	16	5
24627180020	8699931013214	18	5
24627200020	8699931013221	20	5
24627220020	8699931014235	22	5
24627240020	8699931014242	24	5
24627260020	8699931014259	26	5

2.4 MM LC MINI FRAGMENT SCREWS

SMALL HEAD SCREW Ti Ø 2.4 MM

TST Code	Barcode	Length	Qty
24620100024	8699931015218	10	4
24620110024	8699931015201	11	4
24620120024	8699931006728	12	4
24620130024	8699931015195	13	4
24620140024	8699931006735	14	4
24620160024	8699931006742	16	4
24620180024	8699931006759	18	4
24620200024	8699931006766	20	4
24620220024	8699931006773	22	4
24620240024	8699931006780	24	4
24620260024	8699931006001	26	4
24620280024	8699931006018	28	4
24620300024	8699931006025	30	4

SMALL HEAD LOCK. SCREW Ti Ø 2.4 MM

TST Code	Barcode	Length	Qty
24627100024	8699931015607	10	5
24627110024	8699931015591	11	5
24627120024	8699931006537	12	5
24627130024	8699931015584	13	5
24627140024	8699931006520	14	5
24627160024	8699931006513	16	5
24627180024	8699931006506	18	5
24627200024	8699931006490	20	5
24627220024	8699931006483	22	5
24627240024	8699931006421	24	5
24627260024	8699931005837	26	5
24627280024	8699931005844	28	5
24627300024	8699931005851	30	5

2.7 MM LC MINI FRAGMENT SCREWS

SMALL HEAD SCREW Ti Ø 2.7 MM

TST Code	Barcode	Length	Qty
24620120027	8699931006841	12	4
24620140027	8699931006834	14	4
24620160027	8699931006827	16	4
24620180027	8699931006810	18	4
24620200027	8699931006803	20	4
24620220027	8699931006797	22	4
24620240027	8699931006162	24	4
24620260027	8699931006155	26	4
24620280027	8699931006148	28	4
24620300027	8699931006131	30	4
24620320027	8699931006124	32	4
24620340027	8699931006117	34	4
24620360027	8699931006100	36	4
24620380027	8699931006094	38	4
24620400027	8699931006087	40	4

SMALL HEAD LOCK. SCREW Ti Ø 2.7 MM

TST Code	Barcode	Length	Qty
24627120027	8699931007220	12	5
24627140027	8699931007213	14	5
24627160027	8699931007206	16	5
24627180027	8699931007190	18	5
24627200027	8699931007183	20	5
24627220027	8699931007176	22	5
24627240027	8699931005912	24	5
24627260027	8699931005929	26	5
24627280027	8699931005936	28	5
24627300027	8699931005943	30	5
24627320027	8699931005950	32	5
24627340027	8699931005967	34	5
24627360027	8699931005974	36	5
24627380027	8699931005981	38	5
24627400027	8699931005998	40	5

Instruments

No	TST Code	Barcode	Description	Qty
1	**00001104010**	**8699931019674**	**MINI FRAGMENT 1.DESIGN TRAY**	**1**
2	00000100201	8699931021448	2.0 MM LC MINI FRAGMENT PLATE BOX	1
3	00000100241	8699931021431	2.4 MM LC MINI FRAGMENT PLATE BOX	1
4	00000100271	8699931021424	2.7 MM LC MINI FRAGMENT PLATE BOX	1
5	**00000104001**	**8699931019698**	**MINI FRAGMENT SCREW BOX**	**1**
6	**00001104020**	**8699931019681**	**MINI FRAGMENT 2.DESIGN TRAY**	**1**
7	03020000115	8698673493353	PENSET SMALL	1
8	02000480017	8699931029253	SCREW DRIVER QUICK HEX. TIP Ø 1.7X80 MM	2
9	02015100015	8699931021547	UNIVERSAL SCREW DRIVER HANDLE	1
10	02271000004	8699931000146	PLATE-PIN CLAMP	1
11	03040200125	8698673493261	PLATE BENDER 125 MM	1
12	20005200015	8699931019704	THREADED DRILL SLEEVE Ø1.5 MM	1
13	02005800020	8699931029581	THREADED DRILL SLEEVE Ø 2X40 MM FOR SMALL HEAD SCR	1
14	02005300015	8699931019735	DRILL SLEEVE Ø1.5 MM	1
15	02005300020	8699931019742	DRILL SLEEVE Ø2 MM	1
16	02012000100	8699931019759	THREADED BENDING ROD	2
17	02345020000	8698673493506	PLATE-WIRE CUTTER UP TO Ø 3 MM	1
18	07040000001	8699931020748	COMPRESSION CLAMP	1
19	02005150150	8699931032390	COMPRESSION K-WIRE 1.5X150 MM (THREADED TIP)	2
20	04550129140	8699931032352	K-WIRE TUBE Ø12XØ9X140 MM	1
20	04551000110	8699931032581	K-WIRE TUBE Ø10XØ8X110 MM	1
20	04550129160	8699931032475	K-WIRE TUBE Ø12XØ9X160 MM	1
20	23410100115	8698673452961	KIRSCHNER WIRE TROCAR POINT 1.5X100 MM	4
20	22310130020	8698673450400	BONE DRILL 2.0X130 MM	2
20	01260009015	8680858424795	DRILL BIT 1.5X90 MM	1
20	00211015064	8699931023121	QUICK DRILL Ø 1.5X64 MM	1
20	00223120130	8698673448278	QUICK DRILL Ø 2X130 MM	1
21	02005000500	8698673497023	DEPTH GAUGE (0-50 MM)	1
	00270270110	**8699931010763**	**CONTAINER 270X270X110 MM**	**1**

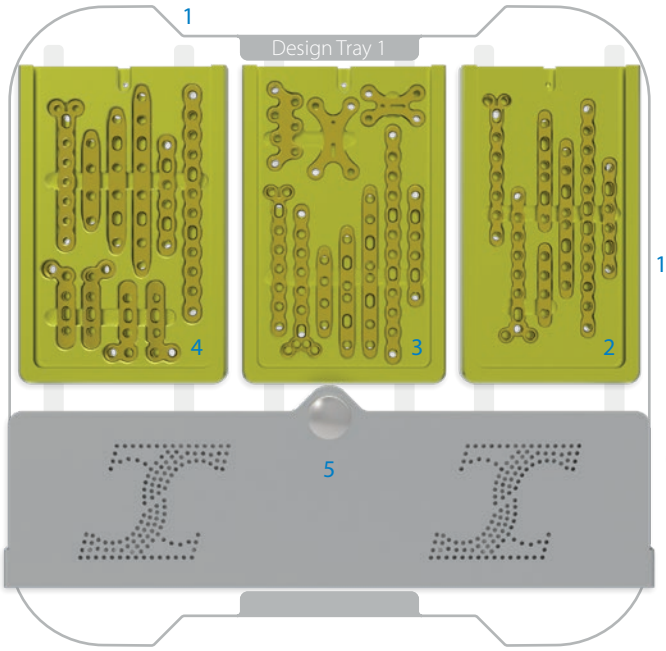

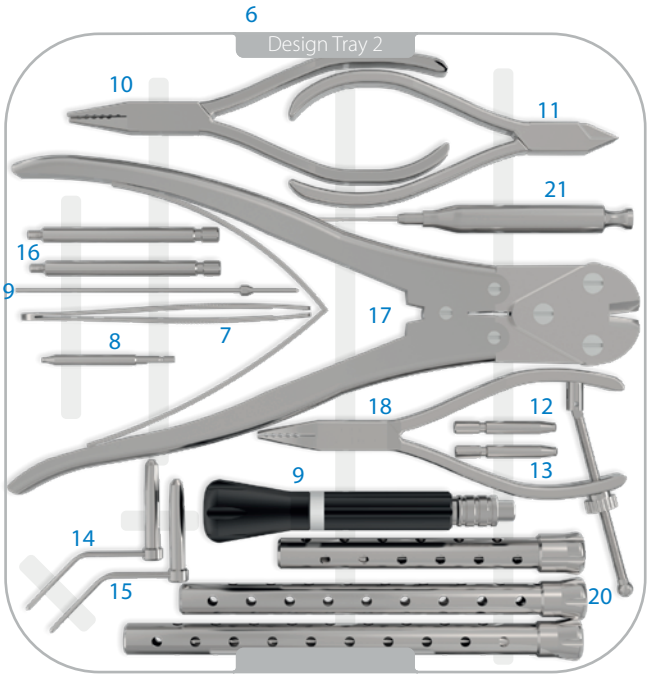

LW-27
HANDY TENSION BAND SYSTEM

HANDY TENSION BAND SYSTEM SS

Indications: Medial Malleolar Fractures, Olecranon Fractures.

TST Code	Barcode	Description	Quantity
33110000021	8699931018882	HANDY TENSION BAND DOUBLE HOLES U PIN Ø2 MM (S.S.)	2
33110000041	8699931030907	HANDY TENSION BAND DOUBLE HOLES U PIN 2MM LONG-S.S	1
22110300008	8698673450851	CERCLAGE WIRES 0.8 MM	2

SCREW WASHER SS Ø 8 MM

TST Code	Barcode	Diameter	Qty
20810000008	8699931020656	8	5

MALLEOLAR SCREW Ø 4 MM

TST Code	Barcode	Length	Qty
20310720040	8699931016024	20	2
20310725040	8699931016017	25	2
20310730040	8699931016000	30	2
20310735040	8699931015997	35	2
20310740040	8699931015980	40	2
20310745040	8699931015973	45	2
20310750040	8699931015966	50	2
20310755040	8699931015959	55	2
20310760040	8699931015942	60	2
20310765040	8699931015935	65	2
20310770040	8699931015928	70	2

LOCKING CORTEX SCREW CONIC HEAD Ø 3.5 MM

TST Code	Barcode	Length	Qty
20117120935	8698673461550	12	2
20117140935	8698673442511	14	2
20117160935	8698673442528	16	2
20117180935	8698673442535	18	2
20117200935	8698673442542	20	2
20117220935	8698673442559	22	2
20117240935	8698673442566	24	2
20117260935	8698673442573	26	2
20117280935	8698673442580	28	2
20117300935	8698673442597	30	2
20117320935	8698673442603	32	2
20117340935	8698673442610	34	2
20117360935	8698673442627	36	2
20117380935	8698673442634	38	2
20117400935	8698673442641	40	2

SPECIAL HEAD CORTICAL SCREW 3.5 MM

TST Code	Barcode	Length	Qty
22810120035	8699931004694	12	2
22810140035	8699931004700	14	2
22810160035	8699931004717	16	2
22810180035	8699931004724	18	2
22810200035	8699931004731	20	2
22810220035	8699931004748	22	2
22810240035	8699931004755	24	2
22810260035	8699931004762	26	2
22810280035	8699931004779	28	2
22810300035	8699931004786	30	2
22810320035	8699931004793	32	2
22810340035	8699931004809	34	2
22810360035	8699931004816	36	2
22810380035	8699931004823	38	2
22810400035	8699931004830	40	2

Instruments

No	TST Code	Barcode	Description	Qty
	00000402100	8699931019261	HANDY TENSION BAND 1.DESIGN TRAY	1
	00000402022	8699931028799	HANDY TENSION BAND IMPLANT BOX	1
	33110000021	8699931018882	HANDY TENSION BAND DOUBLE HOLES U PIN Ø2 MM (S.S.)	2
	33110000041	8699931030907	HANDY TENSION BAND DOUBLE HOLES U PIN 2MM LONG-S.S	1
	22110300008	8698673450851	CERCLAGE WIRES 0.8 MM	2
1	00000402200	8699931019278	HANDY TENSION BAND 2.DESIGN TRAY	1
2	02271000004	8699931000146	PLATE-PIN CLAMP	2
3	02345020000	8698673493506	PLATE-WIRE CUTTER UP TO Ø 3 MM	1
4	03040200125	8698673493261	PLATE BENDER 125 MM	1
5	00000402300	8699931023091	HANDY TENSION BAND 3.DESIGN TRAY	1
6	01193002009	8699931028126	BONE HAMMER - MEDIUM	1
7	02010101001	8698673441187	SOFT SCREW DRIVER QUICK SMALL	1
8	02020103025	8699931010930	SCREW DRIVER QUICK TIP 2.5XØ5X130 MM	1
9	04070000100	8699931020663	IMPACTOR SINGLE	1
10	04070000200	8699931020670	IMPACTOR DOUBLE	1
11	03606000010	8698673494862	PENSET	1
12	23410150120	8698673453104	KIRSCHNER WIRE TROCAR POINT 2X150 MM	5
12	04550129160	8699931032475	K-WIRE TUBE Ø12XØ9X160 MM	1
12	22310130020	8698673450400	BONE DRILL 2.0X130 MM	2
12	22310130027	8698673450424	BONE DRILL 2.7 X 130 MM	2
13	02070001200	8699931021912	HTB HANDLED DRILL GUIDE	1
14	02070000200	8699931020694	HTB DRILL GUIDE Ø2 MM (DOUBLE HOLES U PIN)	1
15	02005200027	8699931020700	THREADED DRILL SLEEVE Ø2.7 MM	1
16	02005300027	8699931020717	DRILL SLEEVE Ø2.7 MM	1
17	02005000750	8699931024319	DEPTH GAUGE - HANDY TENSION BAND SYSTEM	1
	00000402012	8699931019285	HANDY TENSION BAND SCREW BOX	1
	00270270140	8699931024524	CONTAINER 270X270X140 MM	1

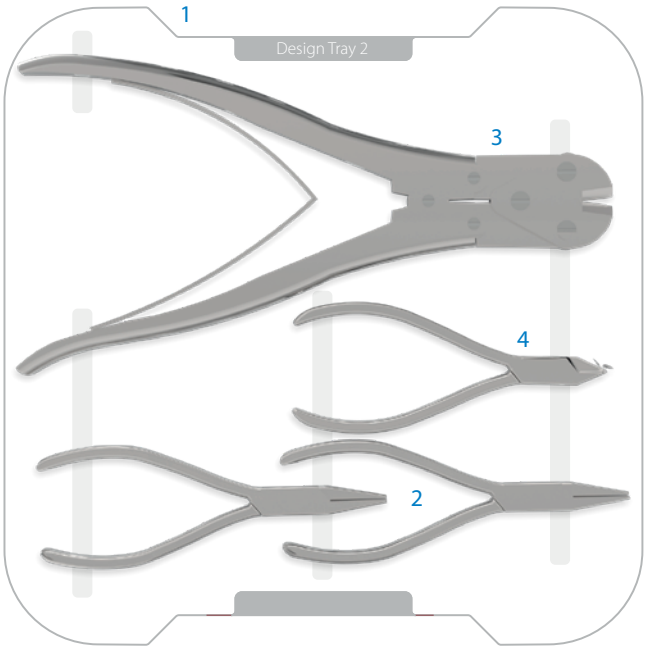

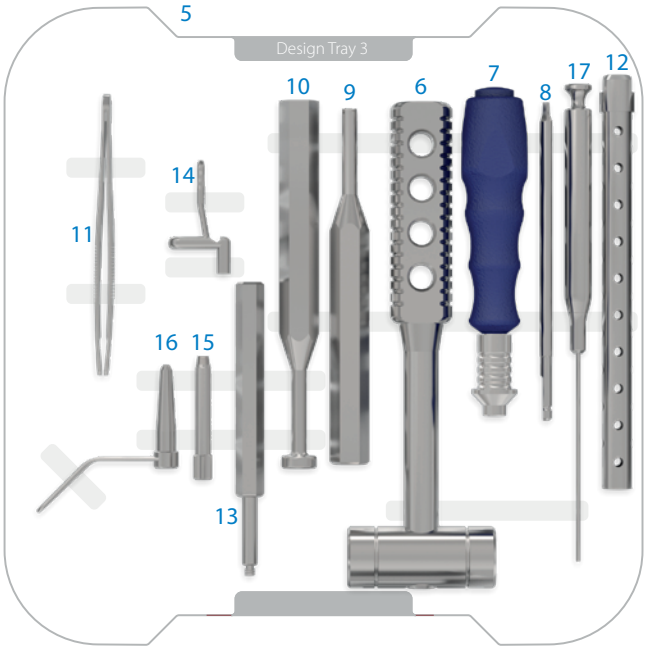

CS-02
HCCS
Micro-Mini-Standard
SET

HCCS MICRO-MINI-STANDARD

Headless Cannulated Compression Screws

The innovative design of the screws include a taper, variable thread pitch and fully threaded length to provide strong compression and holding power for fractures, osteotomies and fusions. These self-drilling screws feature strong guide wires and hex drivers that are designed for optimum screw placement.

Indications;
HCCS Micro: scaphoid fractures, phalangeal fractures, carpal fusions, MCP fusions, radial head fractures, chevron, Akin and Weil osteotomies and OCD repair.
HCCS Mini: scaphoid fractures and nonunions, carpal fusions, radial styloid fractures, MCP fusions, capitellum fractures, bunionectomies: proximal and distal, tarsal fractures, 5th metatarsal fractures, midfoot fusions, OCD repair and osteotomies.
HCCS Standard: talus fractures, malleolar fractures, midfoot fusions, MTP fusions and greater tuberosity fractures.

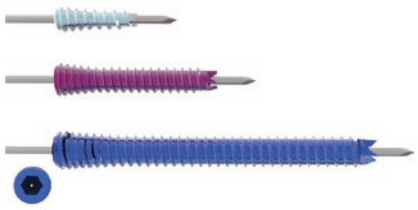

TST Code	Barcode	Description	Diameter (TIP X TAIL)	Length	Qty
20622528080	8698673465251	MICRO	2.5 X 2.8 MM	8 MM	3
20622528100	8698673465268	MICRO	2.5 X 2.8 MM	10 MM	3
20622528120	8698673465275	MICRO	2.5 X 2.8 MM	12 MM	3
20622528140	8698673465282	MICRO	2.5 X 2.8 MM	14 MM	3
20622528160	8698673465299	MICRO	2.5 X 2.8 MM	16 MM	3
20622528180	8698673465305	MICRO	2.5 X 2.8 MM	18 MM	3
20622528200	8699931028065	MICRO	2.5 X 2.8 MM	20 MM	3
20622528220	8699931028072	MICRO	2.5 X 2.8 MM	22 MM	3
20622528240	8699931028089	MICRO	2.5 X 2.8 MM	24 MM	3
20622528260	8699931036459	MICRO	2.5 X 2.8 MM	26 MM	3
20622528280	8699931036466	MICRO	2.5 X 2.8 MM	28 MM	3
20622528300	8699931036473	MICRO	2.5 X 2.8 MM	30 MM	3
20623338125	8698673424708	MINI	3.3 X 3.8 MM	12.5 MM	3
20623338150	8698673424715	MINI	3.3 X 3.8 MM	15 MM	3
20623338175	8698673424722	MINI	3.3 X 3.8 MM	17.5 MM	3
20623338200	8698673424739	MINI	3.3 X 3.8 MM	20 MM	3
20623338225	8698673424746	MINI	3.3 X 3.8 MM	22.5 MM	3
20623338250	8698673424753	MINI	3.3 X 3.8 MM	25 MM	3
20623338275	8698673424760	MINI	3.3 X 3.8 MM	27.5 MM	3
20623338300	8698673424777	MINI	3.3 X 3.8 MM	30 MM	3
20623338325	8699931036480	MINI	3.3 X 3.8 MM	32.5 MM	3
20623338350	8680858400010	MINI	3.3 X 3.8 MM	35 MM	3
20623338375	8680858400027	MINI	3.3 X 3.8 MM	37.5 MM	3
20624045200	8699931003789	STANDARD	4.0 X 4.5 MM	20 MM	3
20624045250	8698673457539	STANDARD	4.0 X 4.5 MM	25 MM	3
20624045300	8698673457546	STANDARD	4.0 X 4.5 MM	30 MM	3
20624045350	8698673457553	STANDARD	4.0 X 4.5 MM	35 MM	3
20624045400	8698673457560	STANDARD	4.0 X 4.5 MM	40 MM	3
20624045450	8699931028881	STANDARD	4.0 X 4.5 MM	45 MM	3
20624045500	8698673457577	STANDARD	4.0 X 4.5 MM	50 MM	3

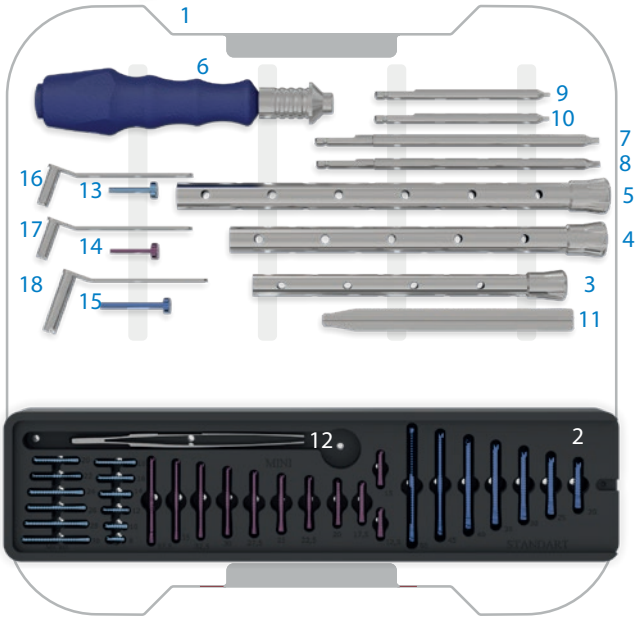

No	TST Code	Barcode	Description	Qty
1	00280136027	8699931029307	DESIGN TRAY 280X136X27 MM	1
2	00275065020	8698673498006	HCCS-MINI-MICRO-STANDARD SCREW BOX	1
3	02062011201	8698673469402	CANNULATED DRILL 2X1.1X20X100 MM	1
4	02066251112	8698673496750	CANNULATED DRILL 2.5X1,1X30X120 MM	1
5	23212530170	8680858426355	CANNULATED DRILL 3.2X1.25X30X170 MM	1
6	02010101004	8699931021868	SOFT SCR. DRIVER CANNULATED QUICK SMALL	1
7	02050100425	8699931005417	CANNULATED SCREW DRIVER QUICK TIP 2.5XØ5X130MM	1
8	02020103025	8699931010930	SCREW DRIVER QUICK TIP 2.5XØ5X130 MM	1
9	02025000170	8698673469396	CANNULATED SCREW DRIVER QUICK HEX.TIP 1.7X80MM	1
10	02000480017	8699931029253	SCREW DRIVER QUICK HEX. TIP Ø 1.7X80 MM	1
5	23410160112	8680858408702	KIRSCHNER WIRE TROCAR POINT 1.2X160 MM	5
4	23410150110	8698673452909	KIRSCHNER WIRE TROCAR POINT 1X150 MM	5
3	23410110110	8680858408696	KIRSCHNER WIRE TROCAR POINT 1X110 MM	5
4	04551208160	8699931028720	K-WIRE TUBE Ø12XØ8X160 MM	1
5	04551208190	8699931029550	K-WIRE TUBE Ø12XØ8X190 MM	1
3	04551000130	8699931032574	K-WIRE TUBE Ø10XØ8X130 MM	1
11	02061900180	8699931008807	LENGTH MEASURING DEVICE - HCCS MIC.-MINI-STD.	1
12	03020000115	8698673493353	PENSET SMALL	1
13	03651000100	8680858408412	K-WIRE SLEEVE FOR MICRO	1
14	03651000200	8680858408429	K-WIRE SLEEVE FOR MINI	1
15	03651000300	8680858408436	K-WIRE SLEEVE FOR STANDARD	1
18	02065300032	8699931008791	HCCS STANDART DRILL SLEEVE Ø 3.2 MM	1
17	02065300025	8699931008784	HCCS MINI DRILL SLEEVE Ø 2.5 MM	1
16	02060001020	8699931031409	HCCS MICRO DRILL SLEEVE 2 MM	1
	00290145060	8680858424733	CONTAINER 290X145X60 MM	1

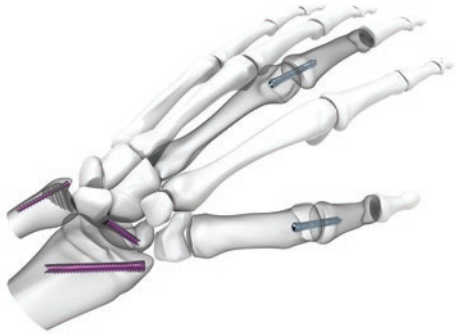

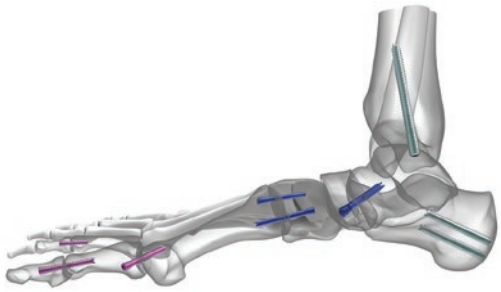

CS-01
HCCS Plus SET

HCCS PLUS

Headless Cannulated Compression Screws

Indications: The Headless Cannulated Compression Screws are indicated for fracture fixation, reconstruction, osteotomy and arthrodesis of various bones and bone fragments including joint fusions (arthrodeses) in the foot and fixation of intra-articular fractures of the humerus, femur and tibia.

TST Code	Barcode	Diameter (TIP X TAIL)	Length	Qty
20625055350	8698673424852	5.0 X 5.5 MM	35 MM	3
20625055400	8698673424869	5.0 X 5.5 MM	40 MM	3
20625055450	8698673424876	5.0 X 5.5 MM	45 MM	3
20625055500	8698673424883	5.0 X 5.5 MM	50 MM	3
20625055550	8698673424890	5.0 X 5.5 MM	55 MM	3
20625055600	8698673424906	5.0 X 5.5 MM	60 MM	3
20625055650	8698673424913	5.0 X 5.5 MM	65 MM	3
20625055700	8698673424920	5.0 X 5.5 MM	70 MM	3
20625055750	8698673424937	5.0 X 5.5 MM	75 MM	3
20625055800	8698673424944	5.0 X 5.5 MM	80 MM	3

No	TST Code	Barcode	Description	Qty
1	00280136027	8699931029307	DESIGN TRAY 280X136X27 MM	1
2	00206000000	8698673497115	HCCS PLUS DESIGN TRAY	1
3	23410180015	8698673458086	KIRSCHNER WIRE TROCAR POINT 1.5X180 MM	5
3	04551208190	8699931029550	K-WIRE TUBE Ø12XØ8X190 MM	1
4	02066361618	8698673485679	CANNULATED DRILL BIT 3.6X1.6X60X180 MM	1
5	02064316150	8699931029246	CANNULATED DRILL CONIC 4.3X3.2X1.6X12.8X150 MM	1
6	02061215180	8699931003161	KIRSCHNER GUIDE WIRE Ø 1.5 MMX 180 MM PLUS	1
7	02060000036	8699931031362	HCCS PLUS DRILL SLEEVE 3.6 MM	1
8	02060000043	8699931031379	HCCS PLUS DRILL SLEEVE 4.3 MM	1
9	02060001000	8699931031386	HCCS PLUS SCREW SLEEVE	1
10	02010101003	8699931021851	SOFT SCR. DRIVER CANNULATED QUICK LARGE	1
11	02050100425	8699931005417	CANNULATED SCREW DRIVER QUICK TIP 2.5XØ5X130MM	1
12	03325200000	8698673494978	LENGTH MEASURING DEVICE - HCCS PLUS	1
13	03020000115	8698673493353	PENSET SMALL	1
14	00290145060	8680858424733	CONTAINER 290X145X60 MM	1

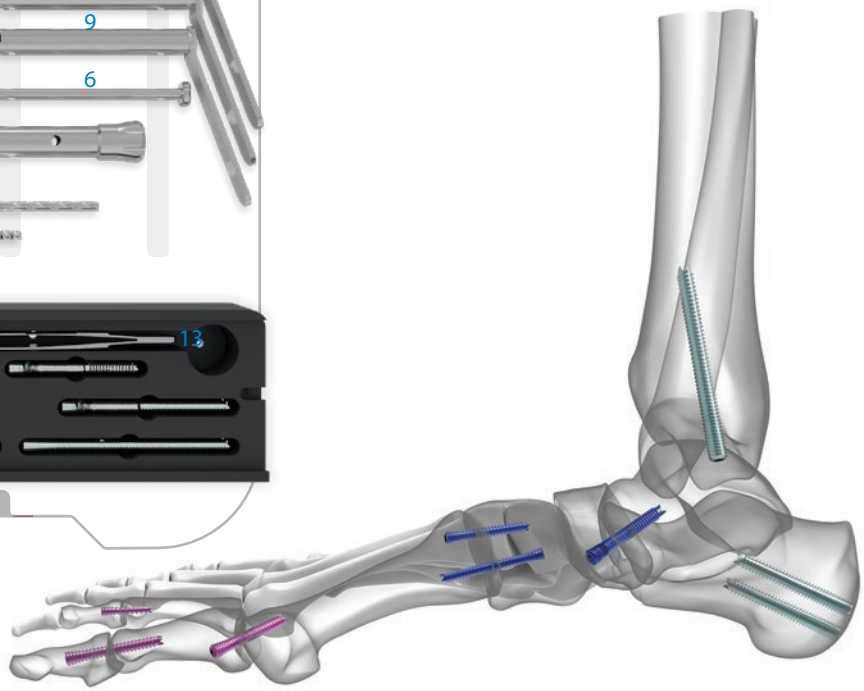

CS-03
HERBERT SCREWS SET

HERBERT SCREWS

Indications: Herbert Bone Screws feature short thread lengths and small diameters for optimum fixation of very small bone fragments.Manufactured from Titanium, the bone screws provide strength and biocompatibility during insertion. The double thread construct, with a different pitch on distal and proximal ends, combines fracture reduction and compression to provide rigid internal fixation.Headless screws can be inserted through articular cartilage and buried below the bone surface to avoid interface with articulation or soft tissue. Leading threads penetrate bone faster than trailing threads, slowing penetration, reducing and compressing fragments during insertion.
TST Cannulated 2.5 mm Herbert Screws are indicated for fixation of fractures and nonunions of small bones and small bone arthrodeses, including scaphoid fractures; intraarticular fractures of the tarsals, metatarsals, carpals and metacarpals; bunionectomies and osteotomies; arthrodeses of small joints (e.g. phalanges); fractures of the patella, ulna and radial styloid.
3.0 mm Herbert Screws are intended for fixation of intra-articular and extra-articular fractures and nonunions of small bones and small bone ragments; arthrodeses of small joint; bunionectomies and osteotomies, including scaphoid and other carpal bones, metacarpals, tarsals, metatarsals, patella, ulnar styloid, capitellum, radial head and radial styliod.
4.3 mm Herbert Screws are indicated for fracture fixation, reconstruction, osteotomy, and arthrodesis of various bones and bone fragments including joint fusions (arthrodeses) in the foot and fixation of intra-articular fractures of the humerus, femur and tibia.

TST CANNULATED HERBERT SCREW - Titanium

TST Code	Barcode	Description	Diameter (TIP X TAIL)	Lenght (TIP X TAIL)	Lenght TOTAL	Qty
20527001025	8699931028294	TST CANNULATED HERBERT SCREW	2.5 X 3.2 MM	4 X 2 MM	10 MM	3
20527001225	8699931008746	TST CANNULATED HERBERT SCREW	2.5 X 3.2 MM	4 X 2 MM	12 MM	3
20527001425	8699931008753	TST CANNULATED HERBERT SCREW	2.5 X 3.2 MM	4 X 2 MM	14 MM	3
20527001625	8699931008760	TST CANNULATED HERBERT SCREW	2.5 X 3.2 MM	5 X 2 MM	16 MM	3
20527001825	8699931008777	TST CANNULATED HERBERT SCREW	2.5 X 3.2 MM	5 X 2 MM	18 MM	3
20527002025	8699931008814	TST CANNULATED HERBERT SCREW	2.5 X 3.2 MM	5 X 2 MM	20 MM	3
20527002225	8699931008821	TST CANNULATED HERBERT SCREW	2.5 X 3.2 MM	5 X 2 MM	22 MM	3
20527002425	8699931008838	TST CANNULATED HERBERT SCREW	2.5 X 3.2 MM	6 X 2 MM	24 MM	3
20527002625	8699931008845	TST CANNULATED HERBERT SCREW	2.5 X 3.2 MM	6 X 2 MM	26 MM	3
20527002825	8699931008852	TST CANNULATED HERBERT SCREW	2.5 X 3.2 MM	6 X 2 MM	28 MM	3
20527003025	8699931008869	TST CANNULATED HERBERT SCREW	2.5 X 3.2 MM	6 X 2 MM	30 MM	3
20527001030	8698673469815	TST CANNULATED HERBERT SCREW	3.0 X 4.0 MM	4 X 2.4 MM	10 MM	3
20527001230	8698673469822	TST CANNULATED HERBERT SCREW	3.0 X 4.0 MM	4 X 2.4 MM	12 MM	3
20527001430	8698673469839	TST CANNULATED HERBERT SCREW	3.0 X 4.0 MM	5 X 5 MM	14 MM	3
20527001630	8698673469846	TST CANNULATED HERBERT SCREW	3.0 X 4.0 MM	5 X 5 MM	16 MM	3
20527001830	8698673469853	TST CANNULATED HERBERT SCREW	3.0 X 4.0 MM	5 X 5 MM	18 MM	3
20527002030	8698673469860	TST CANNULATED HERBERT SCREW	3.0 X 4.0 MM	5 X 5 MM	20 MM	3
20527002230	8698673469877	TST CANNULATED HERBERT SCREW	3.0 X 4.0 MM	5 X 5 MM	22 MM	3
20527002430	8698673469884	TST CANNULATED HERBERT SCREW	3.0 X 4.0 MM	5 X 5 MM	24 MM	3
20527002630	8698673469891	TST CANNULATED HERBERT SCREW	3.0 X 4.0 MM	7 X 5 MM	26 MM	3
20527002830	8698673469907	TST CANNULATED HERBERT SCREW	3.0 X 4.0 MM	7 X 5 MM	28 MM	3
20527003030	8698673469914	TST CANNULATED HERBERT SCREW	3.0 X 4.0 MM	7 X 5 MM	30 MM	3
20527001443	8698673482821	TST CANNULATED HERBERT SCREW	4.3 X 5.3 MM	5 X 5 MM	14 MM	3
20527001643	8698673482838	TST CANNULATED HERBERT SCREW	4.3 X 5.3 MM	5 X 5 MM	16 MM	3
20527001843	8698673482845	TST CANNULATED HERBERT SCREW	4.3 X 5.3 MM	5 X 5 MM	18 MM	3
20527002043	8698673482852	TST CANNULATED HERBERT SCREW	4.3 X 5.3 MM	5 X 5 MM	20 MM	3
20527002243	8698673482869	TST CANNULATED HERBERT SCREW	4.3 X 5.3 MM	5 X 5 MM	22 MM	3
20527002443	8698673482876	TST CANNULATED HERBERT SCREW	4.3 X 5.3 MM	5 X 5 MM	24 MM	3
20527002643	8698673482883	TST CANNULATED HERBERT SCREW	4.3 X 5.3 MM	10 X 5 MM	26 MM	3
20527002843	8698673482890	TST CANNULATED HERBERT SCREW	4.3 X 5.3 MM	10 X 5 MM	28 MM	3
20527003043	8698673482906	TST CANNULATED HERBERT SCREW	4.3 X 5.3 MM	10 X 5 MM	30 MM	3
20527003243	8698673482913	TST CANNULATED HERBERT SCREW	4.3 X 5.3 MM	10 X 5 MM	32 MM	3
20527003443	8698673482920	TST CANNULATED HERBERT SCREW	4.3 X 5.3 MM	10 X 5 MM	34 MM	3
20527003643	8698673482937	TST CANNULATED HERBERT SCREW	4.3 X 5.3 MM	10 X 5 MM	36 MM	3
20527003843	8698673482944	TST CANNULATED HERBERT SCREW	4.3 X 5.3 MM	10 X 5 MM	38 MM	3
20527004043	8698673482951	TST CANNULATED HERBERT SCREW	4.3 X 5.3 MM	10 X 5 MM	40 MM	3
20527004243	8698673482968	TST CANNULATED HERBERT SCREW	4.3 X 5.3 MM	10 X 5 MM	42 MM	3
20527004443	8698673482975	TST CANNULATED HERBERT SCREW	4.3 X 5.3 MM	10 X 5 MM	44 MM	3
20527004643	8698673482982	TST CANNULATED HERBERT SCREW	4.3 X 5.3 MM	15 X 5 MM	46 MM	3
20527004843	8698673482999	TST CANNULATED HERBERT SCREW	4.3 X 5.3 MM	15 X 5 MM	48 MM	3
20527005043	8698673483002	TST CANNULATED HERBERT SCREW	4.3 X 5.3 MM	15 X 5 MM	50 MM	3
20527005243	8698673483019	TST CANNULATED HERBERT SCREW	4.3 X 5.3 MM	15 X 5 MM	52 MM	3
20527005443	8698673483026	TST CANNULATED HERBERT SCREW	4.3 X 5.3 MM	15 X 5 MM	54 MM	3
20527005643	8698673483033	TST CANNULATED HERBERT SCREW	4.3 X 5.3 MM	15 X 5 MM	56 MM	3
20527005843	8698673483040	TST CANNULATED HERBERT SCREW	4.3 X 5.3 MM	15 X 5 MM	58 MM	3
20527006043	8698673483057	TST CANNULATED HERBERT SCREW	4.3 X 5.3 MM	15 X 5 MM	60 MM	3

CS-03 Herbert Screws Set

Instruments

No	TST Code	Barcode	Description	Qty
1	00000901100	8699931017427	HERBERT SCREW 1.TRAY (260X260X65)	1
2	00040101400	8699931017434	HERBERT SCREW TRAY	1
3	02025000170	8698673469396	CANNULATED SCREW DRIVER QUICK HEX.TIP 1.7X80MM	1
4	02050100425	8699931005417	CANNULATED SCREW DRIVER QUICK TIP 2.5XØ5X130MM	1
5	02000452017	8699931029048	SCREW DRIVER QUICK TIP HEXAGONAL Ø1.7XØ4X52 MM	1
6	02020103025	8699931010930	SCREW DRIVER QUICK TIP 2.5XØ5X130 MM	1
7	02010101004	8699931021868	SOFT SCR. DRIVER CANNULATED QUICK SMALL	1
8	02065100002	8699931021899	Ø2 MM DRILL SLEEVE(HERBERT)	1
9	02065100025	8699931018905	DRILL SLEEVE GUIDE Ø 2.5 MM (HERBERT)	1
10	02065100032	8699931018073	Ø3.2 MM DRILL SLEEVE(HERBERT)	1
11	02065100045	8699931028898	Ø4.5 MM DRILL SLEEVE (HERBERT)	1
12	02065100001	8699931023565	Ø1 MM KIRSCHNER SLEEVE(HERBERT)	1
13	02065100015	8699931018059	Ø1.5 MM KIRSCHNER SLEEVE(HERBERT)	1
14	02065100055	8699931017946	Ø5.5 MM HERBERT SCREW SLEEVE	1
15	02050000130	8699931028928	LENGTH MEASURING DEVICE - CANN. HERBERT SCREW	1
16	03020000115	8698673493353	PENSET SMALL	1
17	04551000160	8699931028805	K-WIRE TUBE Ø10XØ8X160 MM	2
17	23410013012	8699931028904	KIRSCHNER WIRE TROCAR POINT 1X130 MM	5
17	23410013015	8699931028911	KIRSCHNER WIRE TROCAR POINT 1.5X130 MM	5
17	02062011201	8698673469402	CANNULATED DRILL 2X1.1X20X100 MM	1
17	02062511100	8699931028935	CANNULATED DRILL Ø 2.5X1.1X2.7X100 MM	1
17	02063216515	8698673485525	CANNULATED DRILL Ø 3.2X1.6X50X150	1
17	02064516150	8699931028959	CANNULATED DRILL Ø 4.5X1.6X15X150 MM	1
	00270270080	8699931009019	CONTAINER 270X270X80 MM	1

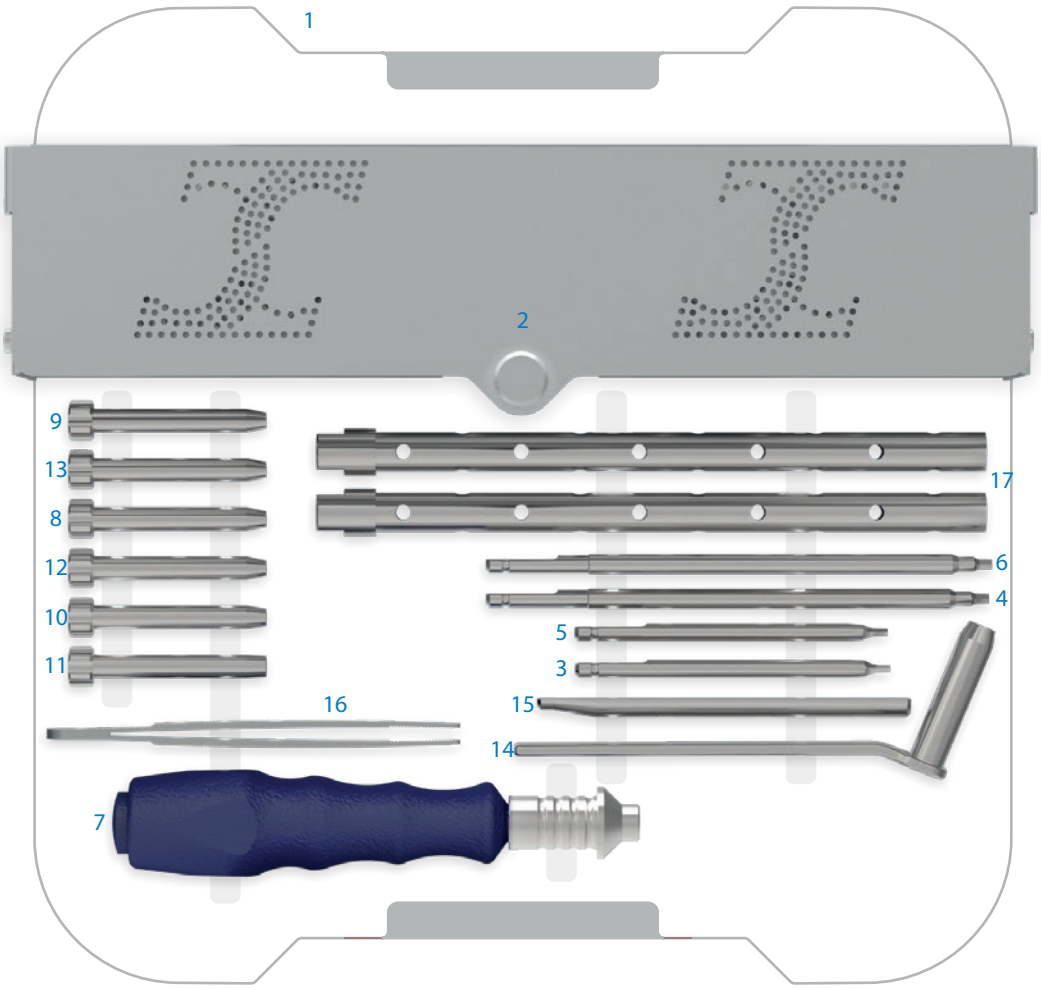

CS-04
4.0 mm CANNULATED SCREWS SET

Ø 4.0 MM CANNULATED SCREWS

No	TST Code	Barcode	Description	Qty
1	00000801200	8699931010916	4 MM CANNULATED DESIGN TRAY	1
2	00000801100	8699931010909	4 MM CANNULATED SCREW TRAY	1
3	23410180112	8698673463424	KIRSCHNER WIRE TROCAR POINT 1.2X180 MM	5
4	03060000120	8699931032192	Ø1.2 MM K-WIRE SLEEVE (Ø 4 MM CANN. SCREW)	1
3	01263230170	8680858426355	GRADUATED CANNULATED DRILL 3.2X1.25X30X170 MM	1
3	04551008190	8699931036756	K-WIRE TUBE Ø10XØ8X190 MM	1
5	02010101004	8699931021868	SOFT SCR. DRIVER CANNULATED QUICK SMALL	1
6	02050100425	8699931005417	CANNULATED SCREW DRIVER QUICK TIP 2.5XØ5X130MM	1
7	02055040000	8699931021875	LENGTH MEASURING DEVICE - 4 MM CANN. SCREW	1
8	01196000040	8699931021820	CANNULATED DRILL SLEEVE GUIDE Ø 3.2 MM	1
9	02006070320	8680858426041	DRILL GUIDE SLEEVE 3.2X70 MM	1
10	02060000904	0020600009043	CANNULATED COUNTERSINK FOR Ø4 MM SCREW	1
	00270270110	8699931010763	CONTAINER 270X270X110 MM	1

CANNULATED SCREW Ø 4.0 MM (16 THRD) Ti

TST Code	Barcode	Length	Qty
20520241640	8698673423190	24	2
20520261640	8698673423206	26	2
20520281640	8698673423213	28	2
20520301640	8698673423220	30	2
20520351640	8698673423237	35	2
20520401640	8698673426375	40	2
20520451640	8698673426382	45	2
20520501640	8698673426399	50	2
20520551640	8698673426405	55	2
20520601640	8698673426412	60	2
20520651640	8698673426429	65	2
20520701640	8698673426436	70	2

CANNULATED SCREW Ø 4.0 MM (FULL THRD) Ti

TST Code	Barcode	Length	Qty
20520140040	8698673469426	14	2
20520160040	8698673469433	16	2
20520180040	8698673469440	18	2
20520200040	8698673469457	20	2
20520220040	8698673469464	22	2
20520240040	8698673469471	24	2
20520260040	8698673469488	26	2
20520280040	8698673469495	28	2
20520300040	8698673469501	30	2
20520350040	8698673469518	35	2
20520400040	8698673469525	40	2
20520450040	8698673469532	45	2
20520500040	8698673469549	50	2
20520550040	8698673469556	55	2
20520600040	8698673469563	60	2
20520650040	8698673469570	65	2
20520700040	8698673469587	70	2

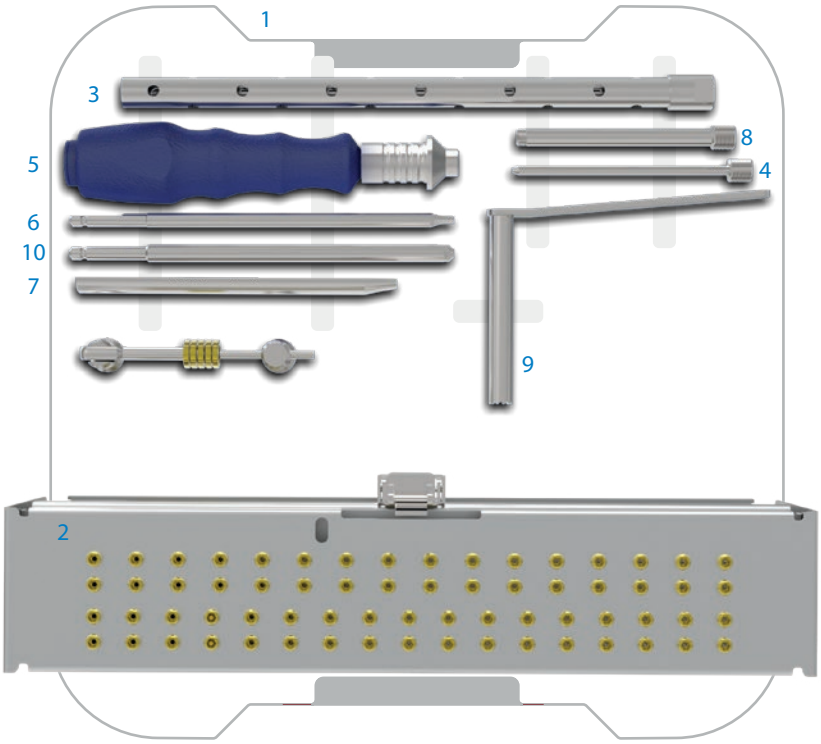

SCREW WASHER Ti Ø 10 MM

TST Code	Barcode	Diameter	Qty
20820000010	8698673434875	10	5

CS-06
6.5 mm CANNULATED SCREWS SET

CS-06 6.5 mm Cannulated Screws Set

Ø 6.5 MM CANNULATED SCREWS

No	TST Code	Barcode	Description	Qty
1	**00000801400**	**8699931010893**	**6.5 CANNULATED DESIGN TRAY**	**1**
2	04551000260	8699931030693	K-WIRE TUBE Ø10XØ8X260 MM	1
3	01216000065	8680858415724	PROTECTION SLEEVE FOR 6.5MM SCREW	1
4	01196000065	8699931011012	CANNULATED DRILL SLEEVE GUIDE Ø 5 MM	1
5	03110000026	8698673486638	KIRSCHNER SLEEVE Ø 2 MM	1
6	01265080250	8699931032246	GRADUATED CANNULATED DRILL Ø5X2.2X80X250 MM	1
7	02051000450	8698673496781	CANNULATED DRILL Ø 5X2.2X80X180 MM	1
2	23410250120	8698673453128	KIRSCHNER WIRE TROCAR POINT 2X250 MM	5
8	08010000002	8698673485587	PROXIMAL KIRSCHNER SLEEVE	1
9	02055065000	8699931021882	LENGTH MEASURING DEVICE - 6.5 MM CANN. SCREW	1
10	**00000801300**	**8699931010886**	**6.5 MM CANNULATED SCREW TRAY**	**1**
11	02055000335	8698673495715	CANNULATED SCREWDRIVER Ø 3.5 MM	1
12	02060000965	8680858419241	CANNULATED COUNTERSINK FOR Ø6.5 MM SCREW	1
	00270270110	**8699931010763**	**CONTAINER 270X270X110 MM**	**1**

CANNULATED SCREW Ø 6.5 MM (16 THRD) Ti

TST Code	Barcode	Length	Qty
20520301665	8698673475724	30 mm	1
20520351665	8698673475731	35 mm	1
20520401665	8698673475748	40 mm	1
20520451665	8698673475755	45 mm	1
20520501665	8698673475762	50 mm	1
20520551665	8698673475779	55 mm	1
20520601665	8698673475786	60 mm	1
20520651665	8698673475793	65 mm	1
20520701665	8698673475809	70 mm	1
20520751665	8698673475816	75 mm	1
20520801665	8698673475823	80 mm	1
20520851665	8698673475830	85 mm	1
20520901665	8698673475847	90 mm	1
20520951665	8698673475854	95 mm	1
20521001665	8698673475656	100 mm	1
20521051665	8698673475663	105 mm	1
20521101665	8698673475670	110 mm	1
20521151665	8698673475694	115 mm	1

CANNULATED SCREW Ø 6.5 MM (32 THRD) Ti

TST Code	Barcode	Length	Qty
20520403265	8698673426467	40 mm	2
20520453265	8698673426474	45 mm	2
20520503265	8698673426603	50 mm	2
20520553265	8698673426481	55 mm	2
20520603265	8698673426498	60 mm	2
20520653265	8698673426504	65 mm	2
20520703265	8698673426511	70 mm	2
20520753265	8698673426528	75 mm	2
20520803265	8698673426535	80 mm	2
20520853265	8698673426542	85 mm	2
20520903265	8698673426559	90 mm	2
20520953265	8698673426566	95 mm	2
20521003265	8698673426573	100 mm	2
20521053265	8698673434417	105 mm	2
20521103265	8698673434424	110 mm	2
20521153265	8698673461888	115 mm	2

CANNULATED SCREW Ø 6.5 MM (FULL THRD) Ti

TST Code	Barcode	Length	Qty
20520300065	8698673442122	30 mm	1
20520350065	8698673442139	35 mm	1
20520400065	8698673442146	40 mm	1
20520450065	8698673442153	45 mm	1
20520500065	8698673442160	50 mm	1
20520550065	8698673442177	55 mm	1
20520600065	8698673442184	60 mm	1
20520650065	8698673442191	65 mm	1
20520700065	8698673442207	70 mm	1
20520750065	8698673442214	75 mm	1
20520800065	8698673442221	80 mm	1
20520850065	8698673442238	85 mm	1
20520900065	8698673442245	90 mm	1
20520950065	8698673442252	95 mm	1
20521000065	8698673442269	100 mm	1
20521050065	8698673442276	105 mm	1
20521100065	8698673442283	110 mm	1
20521150065	8698673475335	115 mm	1

SCREW WASHER Ti Ø 13 MM

TST Code	Barcode	Diameter	Qty
20820000013	8698673428683	13 mm	5

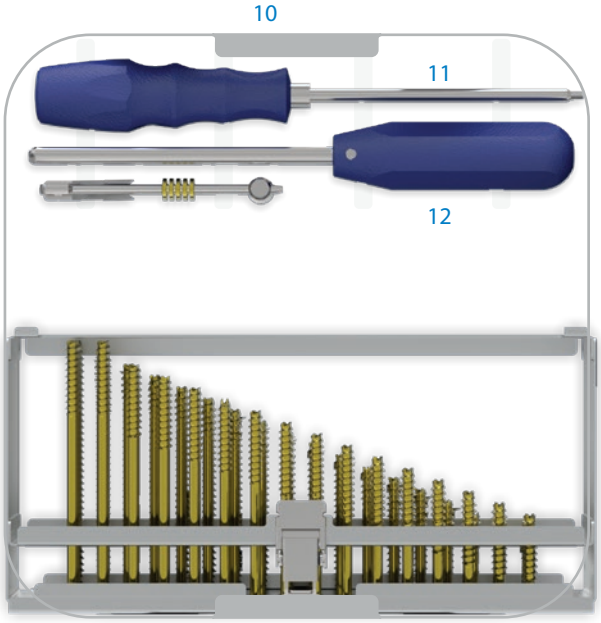

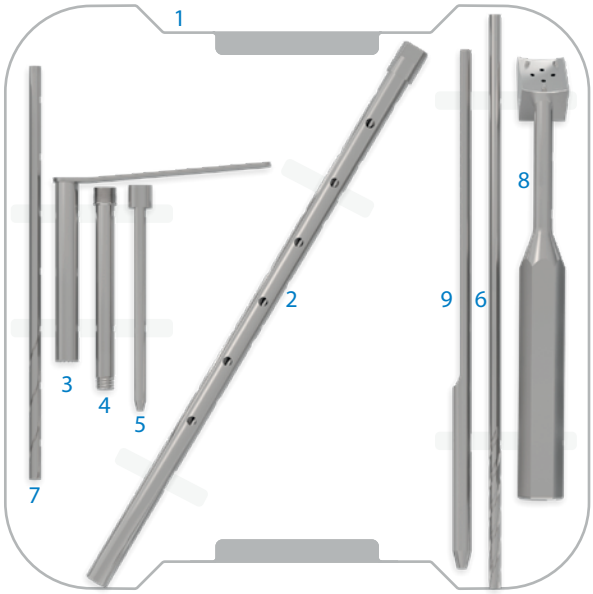

CS-08
4.0 mm CANNULATED LOCKING SCREW

4.0 MM CANNULATED LOCKING SCREWS

Locking cannulated screws are fully threaded. Locking screwhead securely locks the screw to the plate to make a fixed-angle construct. Cannulated Screws can be easily used over a guide wire.

It can be used optionally in upper extremity and ankle plates sets.

TST Code	Barcode	Description	Qty
00000801200	**8699931010916**	**4 MM CANNULATED DESIGN TRAY**	**1**
00000801100	8699931010909	4 MM CANNULATED SCREW TRAY	1
23410180112	8698673463424	KIRSCHNER WIRE TROCAR POINT 1.2X180 MM	5
03060000120	8699931032192	Ø1.2 MM K-WIRE SLEEVE (Ø 4 MM CANN. SCREW)	1
01263230170	8680858426355	GRADUATED CANNULATED DRILL 3.2X1.25X30X170 MM	1
02005173032	8680858444021	THREADED DRILL GUIDE Ø3.2X73 MM	1
04551008190	8699931036756	K-WIRE TUBE Ø10XØ8X190 MM	1
02010101004	8699931021868	SOFT SCR. DRIVER CANNULATED QUICK SMALL	1
02050100425	8699931005417	CANNULATED SCREW DRIVER QUICK TIP 2.5XØ5X130MM	1
02055040000	8699931021875	LENGTH MEASURING DEVICE - 4 MM CANN. SCREW	1
01196000040	8699931021820	CANNULATED DRILL SLEEVE GUIDE Ø 3.2 MM	1
02006070320	8680858426041	DRILL GUIDE SLEEVE 3.2X70 MM	1
02060000904	0020600009043	CANNULATED COUNTERSINK FOR Ø4 MM SCREW	1
00270270110	**8699931010763**	**CONTAINER 270X270X110 MM**	**1**

LOCK.CANNULATED SCREW Ti Ø 4.0 MM

TST Code	Barcode	Length	Qty
20427001440	8680858413706	14	2
20427001640	8680858413713	16	2
20427001840	8680858413720	18	2
20427002040	8680858413737	20	2
20427002240	8680858413744	22	2
20427002440	8680858413751	24	2
20427002640	8680858413768	26	2
20427002840	8680858413775	28	2
20427003040	8680858413782	30	2
20427003540	8680858413799	35	2
20427004040	8680858413805	40	2
20427004540	8680858413812	45	2
20427005040	8680858413829	50	2
20427005540	8680858413836	55	2
20427006040	8680858413843	60	2
20427006540	8680858413850	65	2
20427007040	8680858413867	70	2

CANNULATED CANCELLOUS SCREW (FULL THRD) Ti Ø 4.0 MM

TST Code	Barcode	Length	Qty
20520140040	8698673469426	14	2
20520160040	8698673469433	16	2
20520180040	8698673469440	18	2
20520200040	8698673469457	20	2
20520220040	8698673469464	22	2
20520240040	8698673469471	24	2
20520260040	8698673469488	26	2
20520280040	8698673469495	28	2
20520300040	8698673469501	30	2
20520350040	8698673469518	35	2
20520400040	8698673469525	40	2
20520450040	8698673469532	45	2
20520500040	8698673469549	50	2
20520550040	8698673469556	55	2
20520600040	8698673469563	60	2
20520650040	8698673469570	65	2
20520700040	8698673469587	70	2

CANNULATED CANCELLOUS SCREW (16 MM THRD) Ti Ø 4.0 MM

TST Code	Barcode	Length	Qty
20520241640	8698673423190	24	2
20520261640	8698673423206	26	2
20520281640	8698673423213	28	2
20520301640	8698673423220	30	2
20520351640	8698673423237	35	2
20520401640	8698673426375	40	2
20520451640	8698673426382	45	2
20520501640	8698673426399	50	2
20520551640	8698673426405	55	2
20520601640	8698673426412	60	2
20520651640	8698673426429	65	2
20520701640	8698673426436	70	2

SCREW WASHER Ti Ø 10 MM

TST Code	Barcode	Diameter	Qty
20820000010	8698673434875	10	5

CS-09
5.0-5.5 mm CANNULATED LOCKING SCREW

CS-09 5.0-5.5 mm Cannulated Locking Screw Set

5.0-5.5 MM CANNULATED LOCKING SCREWS

TST Code	Barcode	Description	Qty
00250005055	**8680858444038**	**LOCK.CANN.SCR.DESIGN TRAY**	**1**
02064580250	0020645802500	CANNULATED DRILL BIT Ø 4.5X2.1X80X250 MM (calibre)	1
04551080210	8699931030808	K-WIRE TUBE Ø10XØ8X210 MM	1
02055000335	8698673495715	CANNULATED SCREWDRIVER Ø 3.5 MM	1
03501000045	8699931030778	CONIC THR.DRILL SLEEVE 4.5MM	1
03160000004	8698673462267	MISS PROXIMAL FEMUR KIRSCHNER GUIDE	1
03150020200	8699931030846	MEASURING DEVICE FOR K-WIRE 2X200 MM (PROX. FEMUR)	1
23410200120	8698673453111	KIRSCHNER WIRE TROCAR POINT 2X200 MM	4
00270270110	**8699931010763**	**CONTAINER 270X270X110 MM**	**1**

CANNULATED LOCK. CONICAL HEAD SCREW Ti Ø 5.0 MM

TST Code	Barcode	Length	Qty
20524803050	8699931017069	30	2
20524803550	8699931017038	35	2
20524804050	8699931017021	40	2
20524804550	8699931017014	45	2
20524805050	8699931017007	50	2
20524805550	8699931016994	55	2
20524806050	8699931016987	60	2
20524806550	8699931016970	65	2
20524807050	8699931016963	70	2
20524807550	8699931016956	75	2
20524808050	8699931016949	80	2
20524808550	8699931016932	85	2

CANNULATED LOCK. CANCEL. SCREW Ti Ø 5.5 MM

TST Code	Barcode	Length	Qty
20327950055	8680858405121	50	2
20327955055	8680858405138	55	2
20327960055	8680858405145	60	2
20327965055	8680858405152	65	2
20327970055	8680858405169	70	2
20327975055	8680858405176	75	2
20327980055	8680858405183	80	2
20327985055	8680858405190	85	2
20327990055	8680858405206	90	2
20327995055	8680858405213	95	2
20327910055	8680858405220	100	2
20327910555	8680858405237	105	2

CS-10
6.5 mm CANNULATED LOCKING SCREW

CS-10 6.5 mm Cannulated Locking Screw Set

6.5 MM CANNULATED LOCKING SCREWS

TST Code	Barcode	Description	Qty
00000801300	**8699931010886**	**6.5 MM CANNULATED SCREW TRAY**	**1**
02055000335	8698673495715	CANNULATED SCREWDRIVER Ø 3.5 MM	1
02064580250	0020645802500	CANNULATED DRILL BIT Ø 4.5X2.1X80X250 MM	1
02005100045	8699931026696	THREADED DRILL GUIDE Ø4.5 MM	2
04551080210	8699931030808	K-WIRE TUBE Ø10XØ8X210 MM	1
03150020200	8699931030846	MEASURING DEVICE FOR K-WIRE 2X200 MM (PROX. FEMUR)	1
23410200120	8698673453111	KIRSCHNER WIRE TROCAR POINT 2X200 MM	4
03160000004	8698673462267	MISS PROXIMAL FEMUR KIRSCHNER GUIDE	1
00270270110	**8699931010763**	**CONTAINER 270X270X110 MM**	**1**

CANNULATED LOCK. SCREW Ti Ø 4.5 MM

TST Code	Barcode	Length	Qty
20524803050	8699931017069	30	2
20524803550	8699931017038	35	2
20524804050	8699931017021	40	2
20524804550	8699931017014	45	2
20524805050	8699931017007	50	2
20524805550	8699931016994	55	2
20524806050	8699931016987	60	2
20524806550	8699931016970	65	2
20524807050	8699931016963	70	2
20524807550	8699931016956	75	2
20524808050	8699931016949	80	2
20524808550	8699931016932	85	2

LATES- DISTAL HUMERUS LOCKING Y PLATES- DISTAL HUMERUS EPICONDYLAR LA
LECRANON PLATES- SMALL HEAD OLECRANON PLATES- ULNA RADIUS DIAPHYSIS
LATES- WRIST FUSION LOCKING PLATES- SMALL HEAD DISTAL ULNA PLATES- SMALL
MALL DISTAL RADIUS L PLATES (DORSAL)- SMALL DISTAL RADIUS STRAIGHT PLA
NARROW)- DISTAL RADIUS VAL PLATES (WIDE)- INTERCARPAL FUSION PLATE- PE
DYNAMIC CONDYLAR SCREW) PLATES- TROCHANTER MAJOR STABILIZATION PLAT
STEOTOMY PLATES- MISS DISTAL FEMUR PLATES- INTERCARPAL FUSION PLATE- M
ISTAL TIBIA MEDIAL PLATES- DISTAL TIBIA ANTERIOR LATERAL PLATES- DISTAL TIBIA
OCKING PLATE- CALCANEUS PLATES- PROXIMAL TIBIA POSTERIOMEDIAL PLATES- L
ENSION BAND- HCCS MICRO MINI STANDARD- HCCS PLUS- HERBERT SCREWS- 4.
OCKING SCREWS- 5.0-5.5 MM CANNULATED LOCKING SCREWS- 6.5 MM CANNULAT
LAVICLE HOOK PLATES-SCAPULA PLATES- PROXIMAL HUMERUS LOCKING PLATES
PICONDYLAR LATERAL PLATES- DISTAL HUMERUS LATERAL PLATES- DISTAL HUME
ADIUS DIAPHYSIS PLATES- 1\3 TUBULAR RADIUS ULNA PLATES- CORONOID PLATE
LNA PLATES- SMALL HEAD WIDE DISTAL RADIUS PLATES (VOLAR)-SMALL DISTAL R
ADIUS STRAIGHT PLATES- SMALL DISTAL RADIUS LOCKING T PLATES (VOLAR)- DIS
USION PLATE- PELVIC ACETABULAR PLATES- CABLE PLATES- DHS (DYNAMIC HIP
TABILIZATION PLATES- PROXIMAL FEMUR PLATES- FEMUR PLATES- TIBIA PLATES- D
USION PLATE- MISS PROXIMAL TIBIA LATERAL PLATES- MISS PROXIMAL TIBIA ME
LATES- DISTAL TIBIA POSTERIOR PLATES- PILON PLATES- DISTAL FIBULA PLATES
OSTERIOMEDIAL PLATES- LCP DISTAL TIBIA METAPHYSEAL PLATES- LC MINI FRAG
LUS- HERBERT SCREWS- 4.0 MM CANNULATED SCREWS- 6.5 MM CANNULATED S
CREWS- 6.5 MM CANNULATED LOCKING SCREWS- MINI PLATE 2.0 MM- CLAVICLE PL
UMERUS LOCKING PLATES- LC DCP HUMERUS PLATES- DISTAL HUMERUS LOCKING Y
LATES- DISTAL HUMERUS MEDIAL PLATES- OLECRANON PLATES- SMALL HEAD OLEC
ORONOID PLATES- SMALL RADIAL HEAD PLATES- WRIST FUSION LOCKING PLAT
VOLAR)-SMALL DISTAL RADIUS Y PLATES (DORSAL)- SMALL DISTAL RADIUS L PLATE
PLATES (VOLAR)- DISTAL RADIUS VAL PLATES (NARROW)- DISTAL RADIUS VAL PLA
HS (DYNAMIC HIP SCREW) PLATES- DCS (DYNAMIC CONDYLAR SCREW) PLATES- TR
BIA PLATES- DISTAL FEMUR MEDIAL OSTEOTOMY PLATES- MISS DISTAL FEMUR
ROXIMAL TIBIA MEDIAL PLATES- MISS LC DISTAL TIBIA MEDIAL PLATES- DISTAL TIB
BULA PLATES- ANATOMIC DISTAL FIBULA LOCKING PLATE- CALCANEUS PLATES- P
INI FRAGMENT PLATES (2.0- 2.4- 2.7 MM)- TENSION BAND- HCCS MICRO MINI
ANNULATED SCREWS- 4.0 MM CANNULATED LOCKING SCREWS- 5.0-5.5 MM CANNU
LAVICLE PLATES- DISTAL CLAVICLE PLATES- CLAVICLE HOOK PLATES-SCAPULA PLAT
OCKING Y PLATES- DISTAL HUMERUS EPICONDYLAR LATERAL PLATES- DISTAL HUM
EAD OLECRANON PLATES- ULNA RADIUS DIAPHYSIS PLATES- 1\3 TUBULAR RAD
OCKING PLATES- SMALL HEAD DISTAL ULNA PLATES- SMALL HEAD WIDE DISTAL RA
PLATES (DORSAL)- SMALL DISTAL RADIUS STRAIGHT PLATES- SMALL DISTAL RADI
AL PLATES (WIDE)- INTERCARPAL FUSION PLATE- PELVIC ACETABULAR PLATES- CA
LATES- TROCHANTER MAJOR STABILIZATION PLATES- PROXIMAL FEMUR PLATES- F
EMUR PLATES- INTERCARPAL FUSION PLATE- MISS PROXIMAL TIBIA LATERAL PLATE
BIA ANTERIOR LATERAL PLATES- DISTAL TIBIA POSTERIOR PLATES- PILON PLATES- D
ROXIMAL TIBIA POSTERIOMEDIAL PLATES- LCP DISTAL TIBIA METAPHYSEAL PLAT
TANDARD- HCCS PLUS- HERBERT SCREWS- 4.0 MM CANNULATED SCREWS- 6.5
ANNULATED LOCKING SCREWS- 6.5 MM CANNULATED LOCKING SCREWS- M
LATES-SCAPULA PLATES- PROXIMAL HUMERUS LOCKING PLATES- LC DCP HUME
ATERAL PLATES- DISTAL HUMERUS LATERAL PLATES- DISTAL HUMERUS MEDIAL PLA
LATES- 1\3 TUBULAR RADIUS ULNA PLATES- CORONOID PLATES- SMALL RADIAL HE
EAD WIDE DISTAL RADIUS PLATES (VOLAR)-SMALL DISTAL RADIUS Y PLATES (DO
LATES- SMALL DISTAL RADIUS LOCKING T PLATES (VOLAR)- DISTAL RADIUS VAL PLAT
CETABULAR PLATES- CABLE PLATES- DHS (DYNAMIC HIP SCREW) PLATES- DCS (
ROXIMAL FEMUR PLATES- FEMUR PLATES- TIBIA PLATES- DISTAL FEMUR MEDIAL
ROXIMAL TIBIA LATERAL PLATES- MISS PROXIMAL TIBIA MEDIAL PLATES- MISS LC
OSTERIOR PLATES- PILON PLATES- DISTAL FIBULA PLATES- ANATOMIC DISTAL FIBUL
ISTAL TIBIA METAPHYSEAL PLATES- LC MINI FRAGMENT PLATES (2.0- 2.4- 2.7 MM)-
ANNULATED SCREWS- 6.5 MM CANNULATED SCREWS- 4.0 MM CANNULATED LO
OCKING SCREWS- MINI PLATE 2.0 MM- CLAVICLE PLATES- DISTAL CLAVICLE PLATES-
CP HUMERUS PLATES- DISTAL HUMERUS LOCKING Y PLATES- DISTAL HUMERUS E
EDIAL PLATES- OLECRANON PLATES- SMALL HEAD OLECRANON PLATES- ULNA RAD

tst | Orthopedic Implants

www.tstsan.com